Fuji Electric

Innovating Energy Technology

FUJI Power Semiconductors

IGBT/SiC Devices Selection Guide

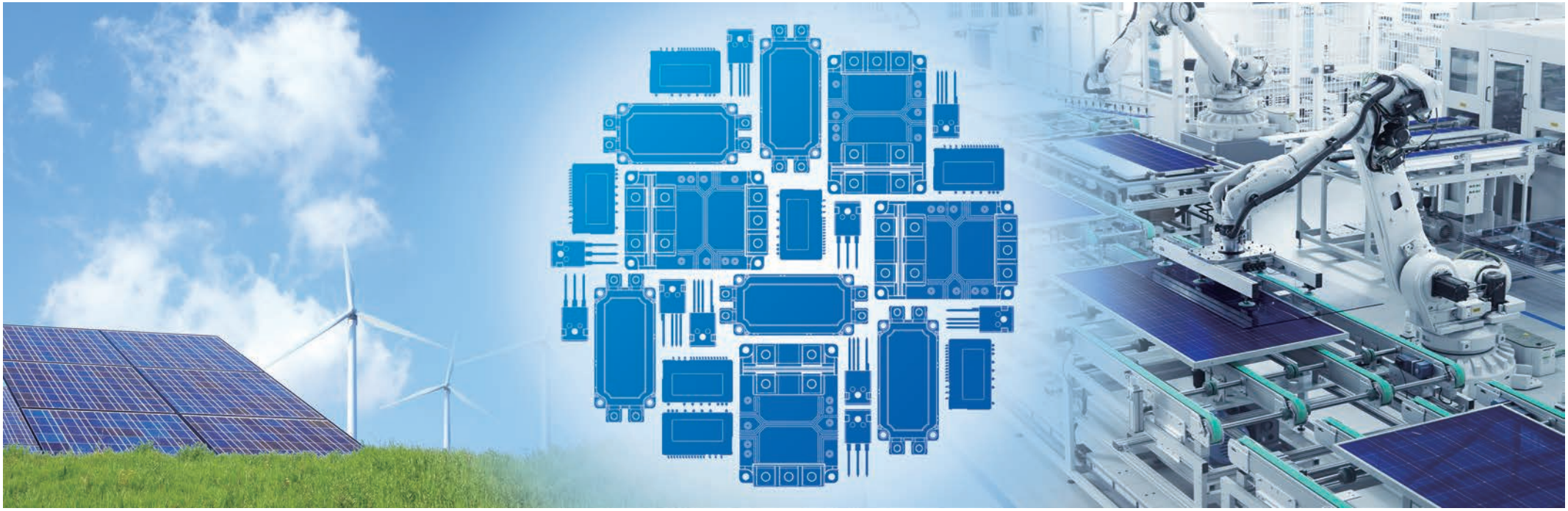

CONTENTS

Small IPM ····· 13
IPM ····· 14
Small PIM ····· 18
PIM ····· 19
6-Pack ····· 21
Standard 2-Pack ····· 23
Standard 1-Pack / Chopper ····· 25
HPnC ····· 26
PrimePACK™ ····· 27
T/I-type NPC 3-level ····· 29
Hybrid SiC Modules ····· 30
All-SiC Modules ····· 31
Automotive IGBT / SiC Modules ····· 32
Discrete IGBT ····· 33
SiC-SBD ····· 34

Note: PrimePACK™ is registered trademark of Infineon Technologies AG, Germany.



25A2-E-0005h

Features of IGBT Module X Series

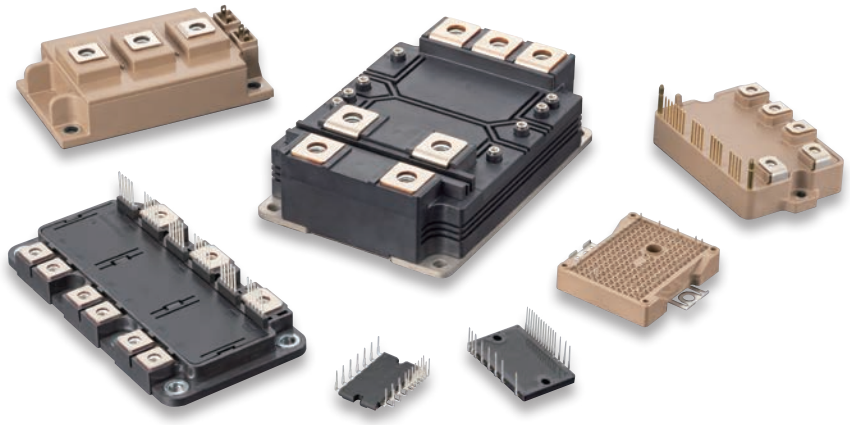

1. Low loss

The surface and vertical structures of the IGBT and diode chips are optimized. This reduces power dissipations during inverter operation compared with previous products (our 6th generation V series).

Reduces inverter power dissipation by 10% and IGBT Junction temperature by 11°C
(Comparison with the 6th Generation V Series (75 A), at f_c = 8 kHz)

Inverter loss comparison (standard usage example)

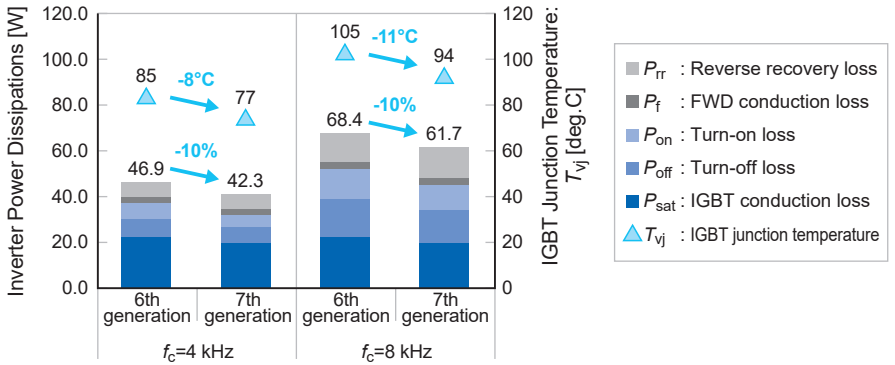

2. Miniaturization

The application of the newly developed insulating substrate has improved the heat dissipation of the module. By suppressing heat generation as well as reducing power loss, some products can be mounted in a package of about 36% smaller.

Application example)

36% reduction

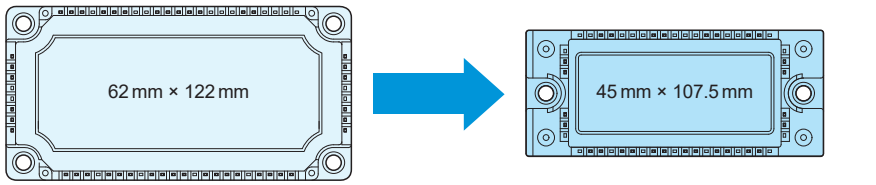

1200V 75A (6th Generation V Series)

1200V 75A (7th Generation X Series)

3. High-temperature operation

Achieves continuous operation at 175 °C through chip optimization and improved reliability and heat resistance of package.

- 35% more output current than the previous generation
- ΔT_{vj} power cycle lifetime is doubled compared to the conventional products, thus the same level of lifetime is secured even at 175°C continuous operation.

Increased output current by $T_{vj(op)}$=175°C

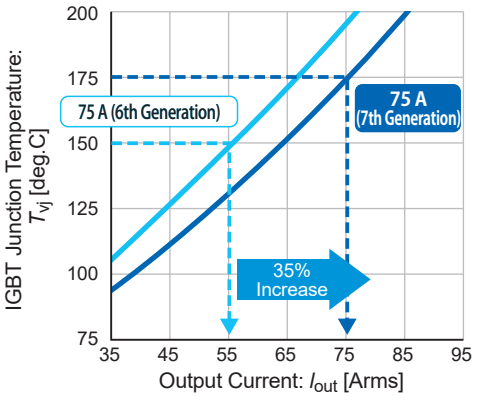

Product Map

Fuji Electric offers a variety of power semiconductors that enable low-loss, highly-efficient power conversion. They are used for applications with a wide range of power capacities, such as industrial machines, social infrastructures, renewable energy systems, home appliances, and information devices.

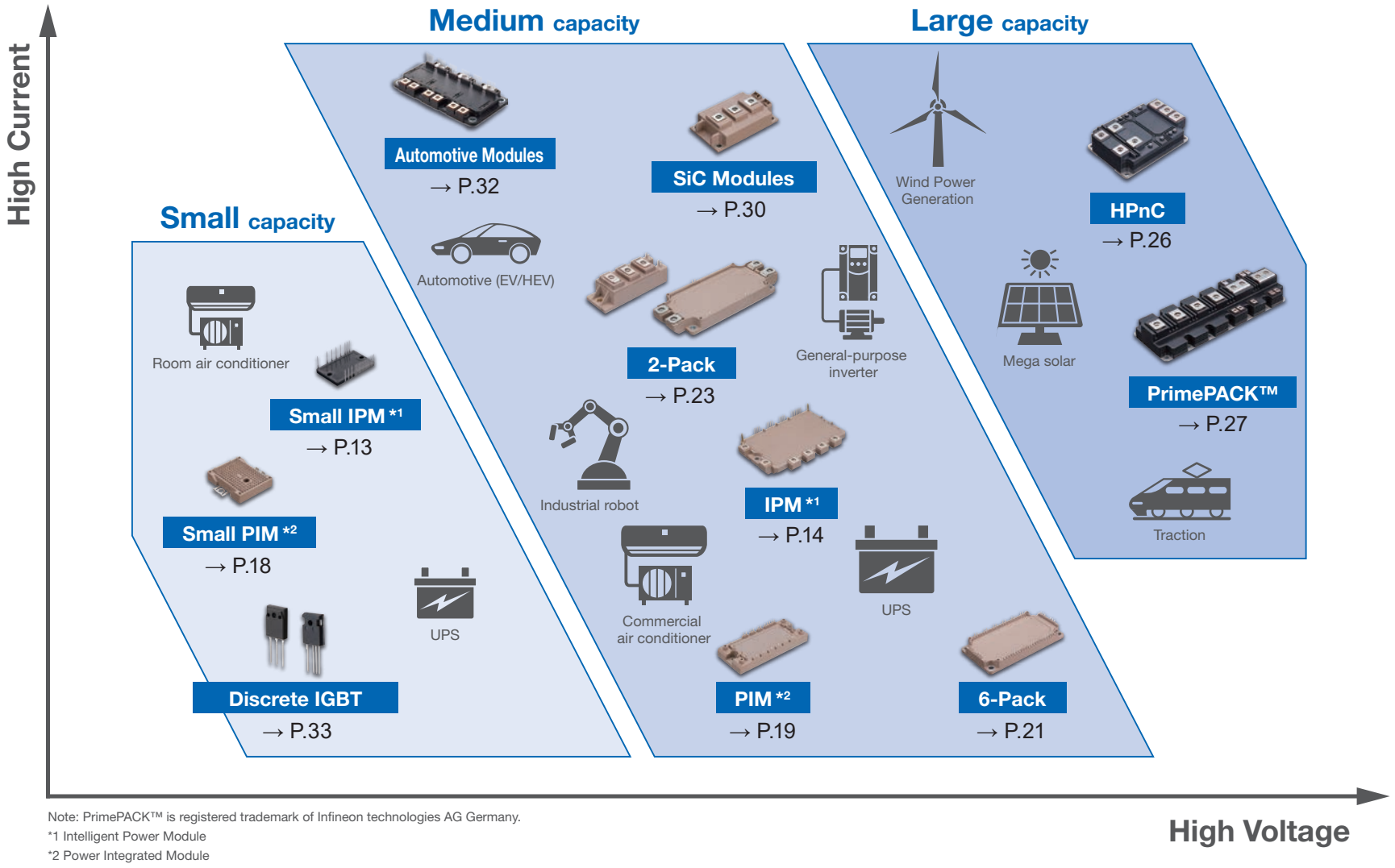

Note: PrimePACK™ is registered trademark of Infineon technologies AG Germany.
*1 Intelligent Power Module
*2 Power Integrated Module

Number of Switches	Products Category	Page	Internal Configuration						Max Rated Voltage							Rated Current					
			Power Module				Discrete IGBT	Discrete SiC-SBD	600V	650V	750V	1200V	1700V	2300V	3300V	≤50A	>50A ≤150A	>150A ≤300A	>300A ≤600A	>600A ≤1200A	>1200A
			Standard Module	Power Integrated Module	Intelligent Power Module	3-level Module															
6	**Small IPM**	13							✓	✓						✓	✓				
6,7	**IPM**	14,15			✓				✓	✓		✓				✓	✓				
		16							✓	✓		✓				✓	✓	✓			
		17							✓	✓		✓					✓	✓	✓		
7	**Small PIM**	18		✓					✓	✓		✓				✓					
	PIM EconoPIM™	19		✓					✓	✓		✓				✓	✓				
		20							✓	✓		✓				✓	✓				
6	**6-Pack EconoPACK™**	21	✓						✓			✓				✓	✓	✓			
		22							✓			✓	✓			✓	✓	✓	✓		
2	**Standard 2-Pack**	23	✓						✓	✓		✓	✓				✓	✓	✓		
		24										✓	✓					✓	✓	✓	
1	**Standard 1-Pack**	25	✓									✓	✓					✓	✓	✓	
	Chopper	25	✓						✓			✓					✓	✓	✓		
1,2	**HPnC**	26	✓										✓	✓	✓				✓	✓	✓
	PrimePACK™	27,28	✓									✓	✓						✓	✓	✓
4,12	**T/I-type NPC 3-level**	29				✓			✓			✓	✓			✓	✓	✓	✓	✓	
2	**Hybrid SiC Modules**	30	✓									✓	✓					✓	✓		
	All-SiC Modules	31	✓									✓	✓	✓	✓			✓	✓	✓	
6	**Automotive IGBT Modules**	32	✓								✓							✓	✓		
12	**Automotive SiC Modules**	32				✓						✓							✓		
1	**Discrete IGBT**	33					✓		✓	✓		✓				✓	✓				
–	**SiC-SBD**	34						✓		✓		✓				✓					

Note: EconoPIM™, EconoPACK™, PrimePACK™ is registered trademark of Infineon Technologies AG, Germany.

IGBT Module Production Number

6 MB I 300 X □…□ - 120 - 50

- 6: Number of IGBT Switches
- MB: IGBT Module Type: MB = Si-IGBT+ Si-Diode
- I: Internal Configuration : I = Standard Modules, R = Power Integrated Modules, P = Intelligent Power Modules
- 300: Rated Current I_C [A]
- X: IGBT Device Technology : X Series(7th Generation) / XR Series(7th Generation) V Series(6th Generation)
- □…□: Package Type
- 120: Max V_{CE} : 060 = 600V, 065 = 650V, 120 = 1200V, 170 = 1700V 230 = 2300V, 330 = 3300V
- 50: Suffix 50 to 99 indicates RoHS compliance

Hybrid SiC Module Production Number

2 MS I 300 V A H 120 C - 53

- 2: Number of IGBT Switches
- MS: SiC-SBD Type: MS = Si-IGBT + SiC-SBD
- I: Internal Configuration : I = Standard Module
- 300: Rated Current I_C [A]
- V: IGBT Device : V= 6th Generation, VW = 6th Gen High speed
- A: SBD Device : A=1st Generation
- H: Package Type
- 120: Max V_{CE} : 120 = 1200V, 170 = 1700V
- C: SiC-SBD for converter : C = Large current
- 53: Suffix 50 to 99 indicates RoHS compliance

All-SiC Module Production Number

2 C I 300 H HE 120 - 50

- 2: Number of MOSFET Switches
- C: SiC-MOSFET Module Type: C = SiC-MOSFET
- I: Internal Configuration : I = Standard Module
- 300: Rated Current I_D [A]
- H: MOSFET Device : H=3rd Generation
- HE: Package Type
- 120: Max V_{DS} : 120 = 1200V, 170 = 1700V, 230 = 2300V, 330 = 3300V
- 50: Suffix 50 to 99 indicates RoHS compliance

Automotive IGBT Module Production Number

6 MB I 600 XR WF 075 V - 50

- 6: Number of IGBT switches
- MB: IGBT Module type: MB = Si-IGBT+ Si-Diode
- I: Internal Configuration : I = Standard Module
- 600: Rated Current I_C [A]
- XR: IGBT Device : XR = XR series (7th Generation)
- WF: Package Type
- 075: Max V_{CE} : 075 = 750V
- V: Application Type : V = xEV
- 50: Suffix 50 to 99 indicates RoHS compliance

Automotive SiC Module Production Number

12 CS I 400 MXH YE 120 V - 50

- 12: Number of MOSFET Switches
- CS: SiC-MOSFET Module Type: CS = SiC-MOSFET
- I: Internal Configuration : I = Standard Module
- 400: Rated Current I_D [A]
- MXH: MOSFET Device : MXH = MXH series (3rd Generation)
- YE: Package Type
- 120: Max V_{DS} : 120 = 1200V
- V: Application Type : V = xEV
- 50: Suffix 50 to 99 indicates RoHS compliance

Discrete IGBT Production Number

F G W 50 N 60 V D

- F: Company Code : Fuji
- G: Device Code : G = IGBT
- W: Package Type : W = TO-247 (Type:B)
- 50: Rated Current I_C [A]
- N: Polarity: N = N-ch
- 60: Max V_{CE} : 60 = 600V, 120 = 1200V
- V: Series: V = V series, RB = RB series
- D: Diode Type: D = With Diode, Blank = Without Diode

F G W 40 XS 65 C

- F: Company Code : Fuji
- G: Device Code : G = IGBT
- W: Package Type : W = TO-247 (Type:B), Z = TO-247-4, WP = TO-247Plus-3, ZP = TO-247Plus-4H
- 40: Rated Current I_C [A]
- XS: Series: XS = XS series
- 65: Max V_{CE} : 65 = 650V, 120 = 1200V
- C: Diode Type: C = With Diode(Full rated), D = With Diode, Blank = Without Diode

SiC Schottky Barrier Diode Production Number

●SiC-SBD 1G

F DC P 10 S 65

- F: Company Code : Fuji
- DC: Device Code : DC = SiC-SBD
- P: Package Type : A = TO-220F/TO-220F-2, C = T-Pack(S), P = TO-220/TO-220-2 (Type: B), Y = TO-247 (Type: A), W = TO-247-2
- 10: Rated Current I_F [A]
- S: Configuration : C = Dual (Cathode common), S or T = Single
- 65: Max V_{RRM} : 65 = 650V, 120 = 1200V

●SiC-SBD 2G

F DC 2 PT 10 S 65

- F: Company Code : Fuji
- DC: Device Code : DC = SiC-SBD
- 2: Generation
- PT: AT:TO-220F-2, PT : TO-220-2 (Type: A), WT : TO-247-2
- 10: Rated Current I_F [A]
- S: Configuration : C = Dual (Cathode common), S = Single
- 65: Max V_{RRM} : 65 = 650V, 120 = 1200V

IPM (Intelligent Power Modules) Products Map

6/7MBP	Ic	IGBT series & Package type		Size	V series		X series		Page
		V series	X series		7 in 1	6 in 1	7 in 1	6 in 1	
		–	XSD, XSF, XSJ, XSK	26×43mm	–	–	–	✓	13
		–	XTA, XTC	31×79mm	–	–	–	✓	13
		–	XRVF	19×33mm	–	–	–	✓	13
		–	XRHA	36×70mm	–	–	–	✓	14
		VAA	XAA	49.5×70mm	–	✓	–	✓	14
		VBA	XBA	50.2×87mm	–	✓	–	✓	14
		–	XJN	50.2×87mm	–	–	✓	–	14
		VFN	XFN	55×90mm	✓	✓	✓	✓	15
		–	XGN	55×90mm	–	–	–	✓	15
		VDA, VDN	XDA, XDN	84×128.5mm	✓	✓	✓	✓	16
		VEA	XEN	110×142mm	✓	✓	✓	✓	17

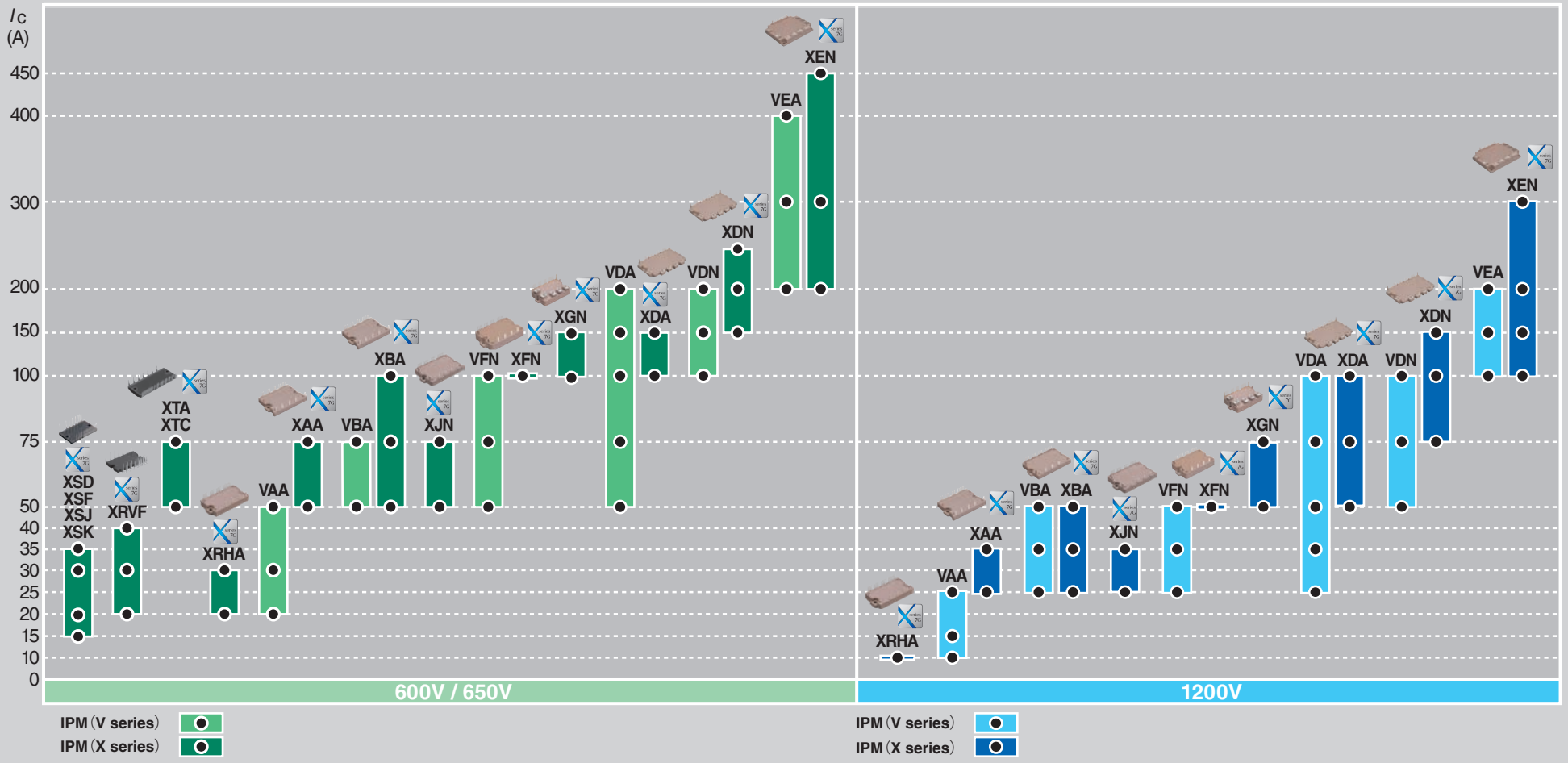

PIM (Power Integrated Modules) Products Map

7MBR	*Ic*	IGBT series & Package type				Size	Page	
		V series		X series				
		Solder pins	Press fit pins	Solder pins	Press fit pins			
		VKC	VKA	XKC	XKA	33.8×62.8mm	18	
		VKD	VKB	XKD, XRKD	XKB, XRKB	56.7×62.8mm	18	
		VA, VM, VP	VW, VY	XM□, XP□	XW□, XY□	45×107.5mm	19,20	EconoPIM™
		VB, VN, VR	VX, VZ	XN□, XR□	XX□, XZ□	62×122mm	19,20	

Note: EconoPIM™ is registered trademark of Infineon Technologies AG, Germany.

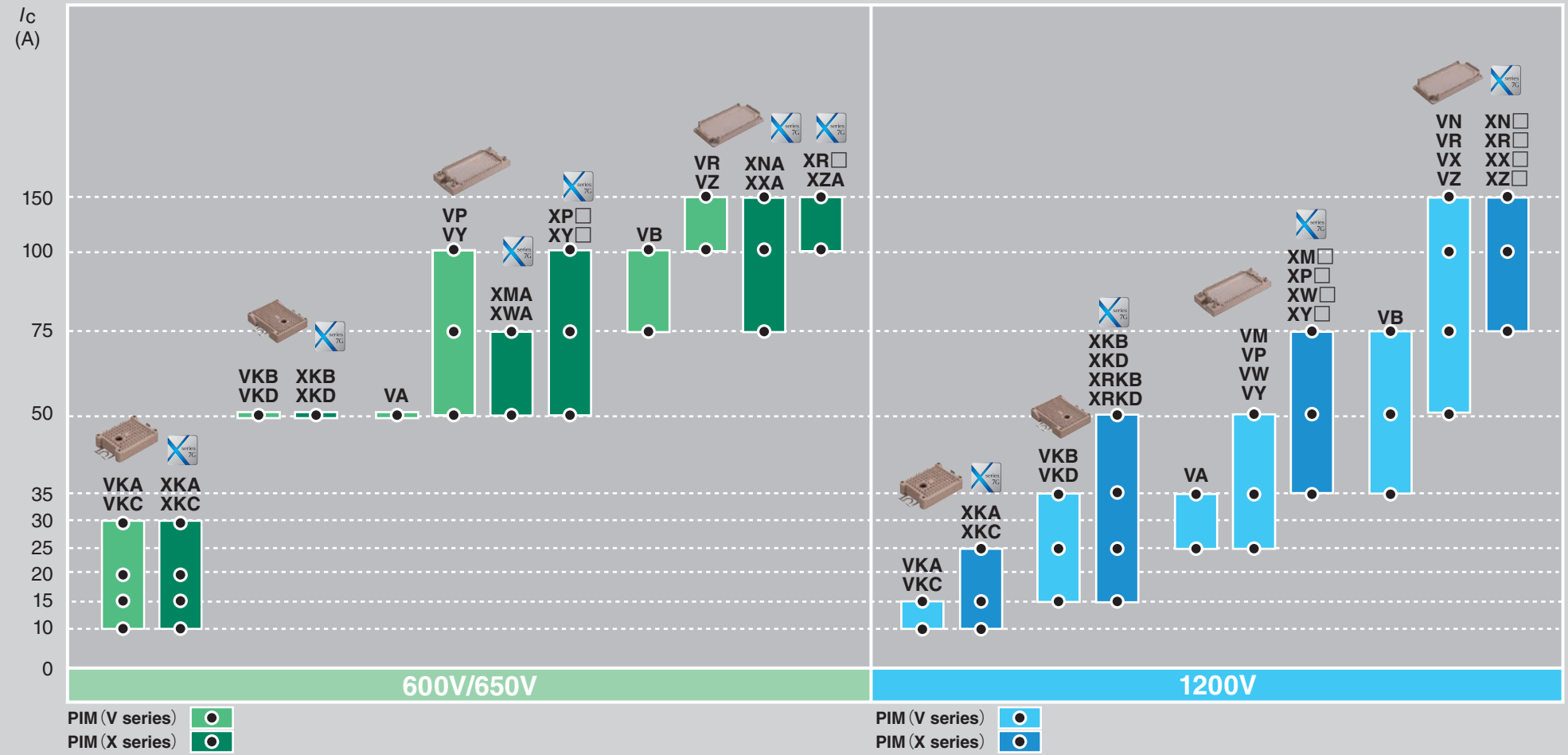

6-Pack (IGBT Modules) Products Map

6MBI	Ic	IGBT series & Package type				Size	Page	
		V series		X series				
		Solder pins	Press fit pins	Solder pins	Press fit pins			
		VA	VW	XAE	XWE	45×107.5mm	21,22	EconoPACK™
		VB	VX	XB□	XX□	62×122mm	21,22	

Note: EconoPACK™ is registered trademark of Infineon Technologies AG, Germany.

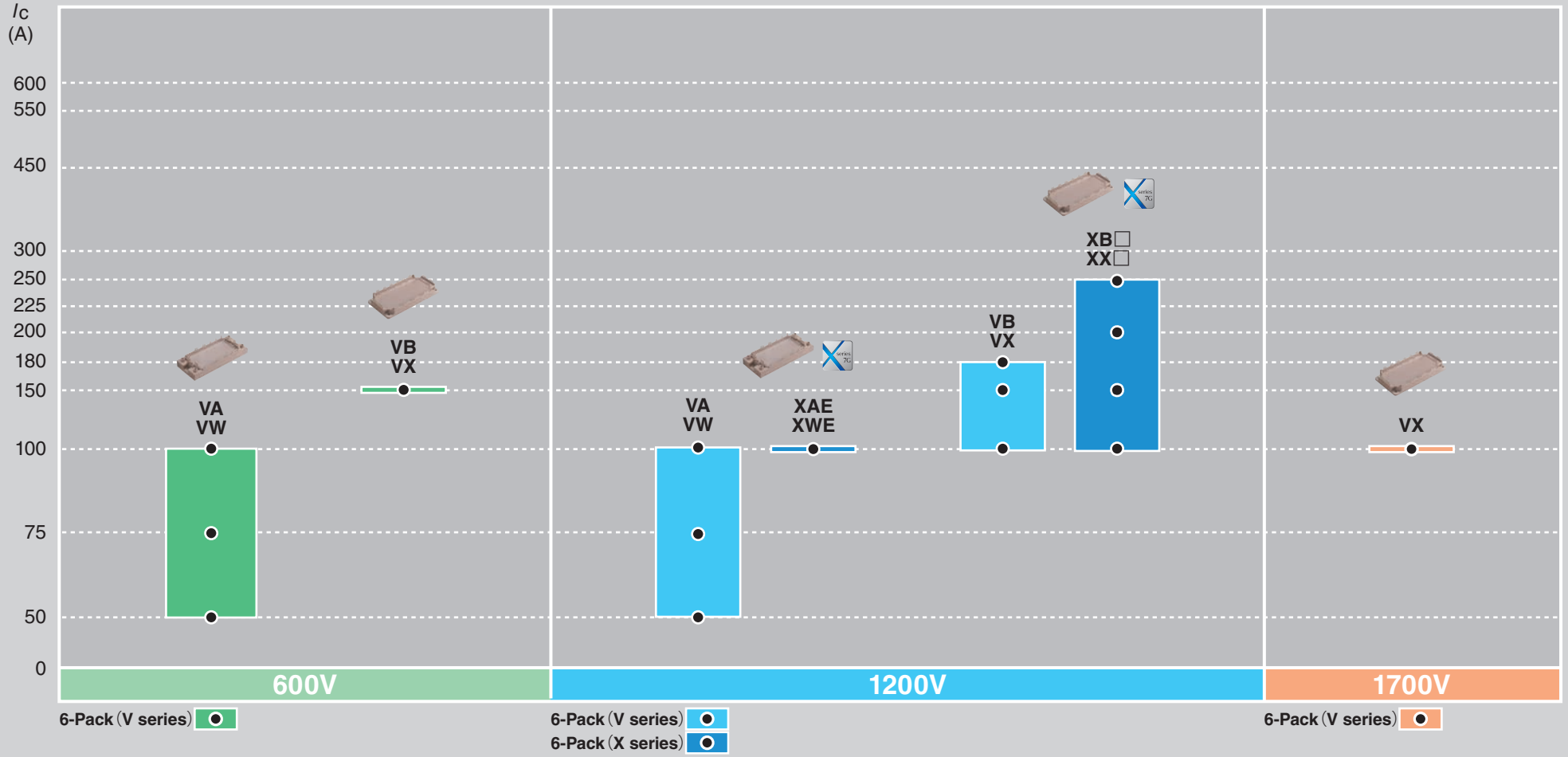

2-Pack (IGBT Modules) Products Map

2MBI	*Ic*	IGBT series & Package type		Size	Page	
		V series	X series			
		VA	XAA	34×94mm	23	Standard Pack
		VB	XBE	45×92mm	23	
		VD, VH	XDE, XHA	62×108mm	23	
		VE	XEE	80×110mm	23	
		VN, VX	XN□, XRN□	62×150mm	24	Dual XT
		-	XYF, XZF, XZG	100×144mm	26	HPnC
		VXA	XXA, XXE	89×172mm	27	PrimePACK™
		VXB	XXB, XXF, XXG, XRXG	89×250mm	27	

Note: PrimePACK™ is registered trademark of Infineon Technologies AG, Germany

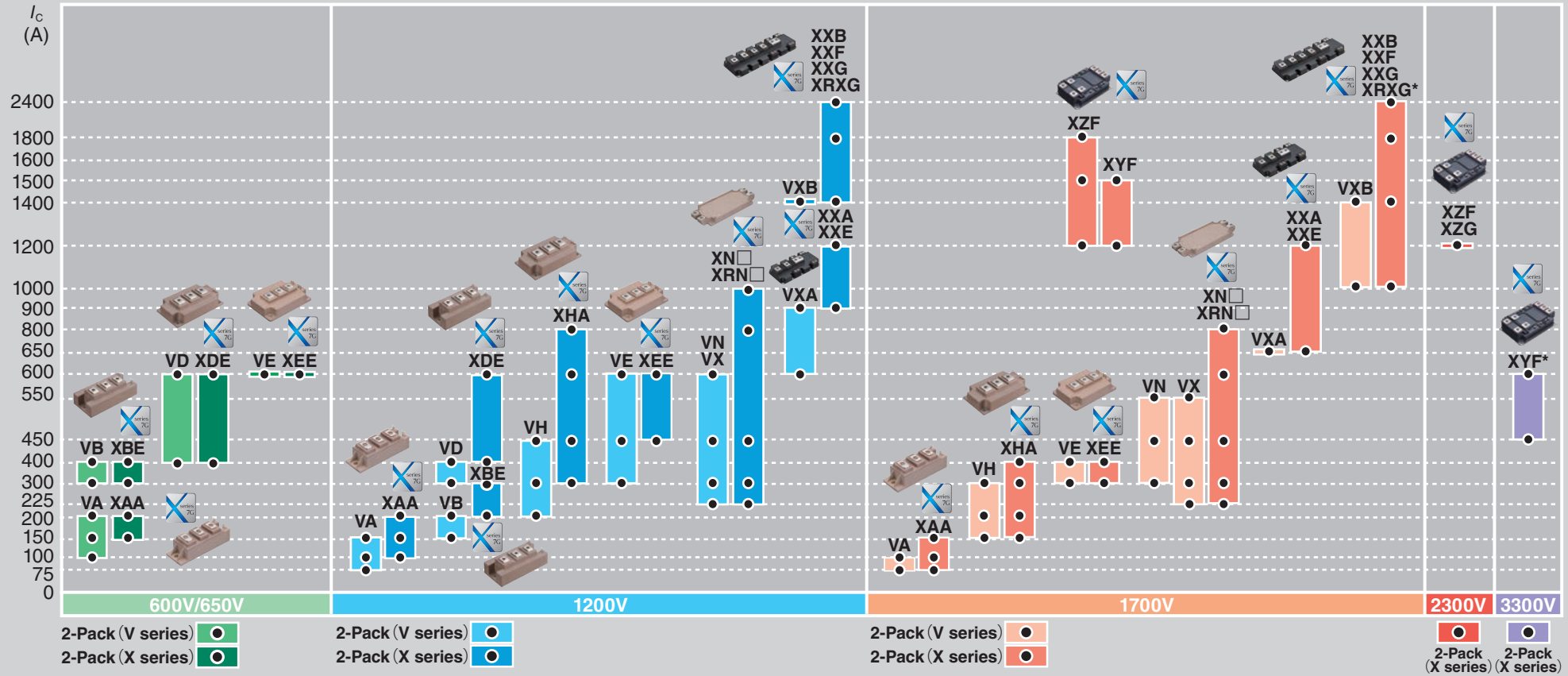

*Under development

2-Pack (SiC Modules) Products Map

2MSI	I_C	Hybrid SiC series & Package type		Size	Page	
		V series	VW series			
		VAB	-	45×92mm	30	
		VAH	VWAH	62×108mm	30	Standard Pack
		VAE	-	80×110mm	30	
		VAN	-	62×150mm	30	Dual XT

2CI	I_D	All-SiC series & Package type	Size	Page	
		3G SiC-MOSFET Modules			
		HHE	62×108mm	31	Standard Pack
		HYF, HZF	100×144mm	31	HPnC

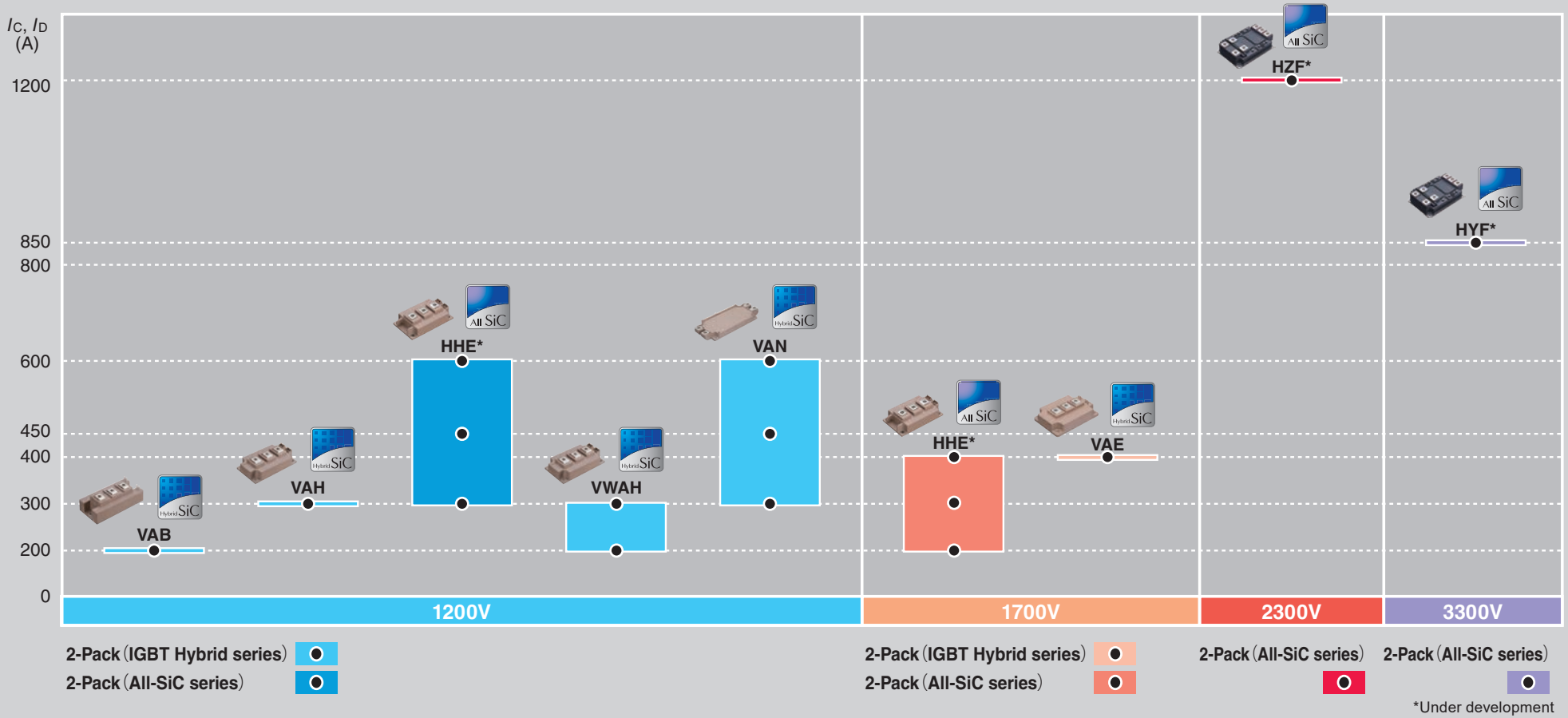

1-Pack (IGBT Modules) Products Map

1MBI	*Ic*	IGBT series & Package type	Size	Page	
		V series			
		V	62×108mm	25	Standard Pack

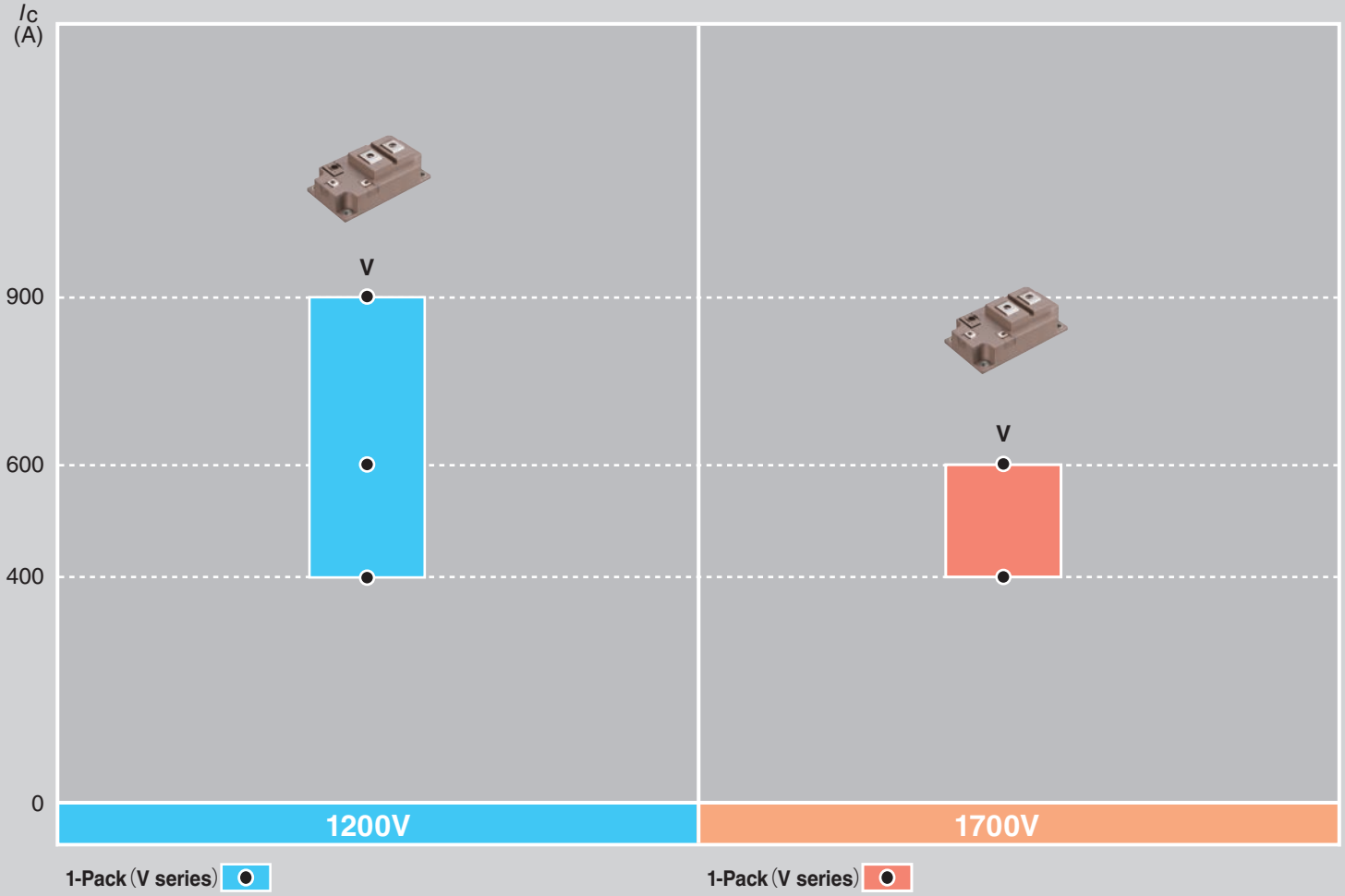

Automotive IGBT Modules Products Map

6MBI	I_C	IGBT series & Package type	Size	Page	
		X series			
		XRWF	136×72mm	32	

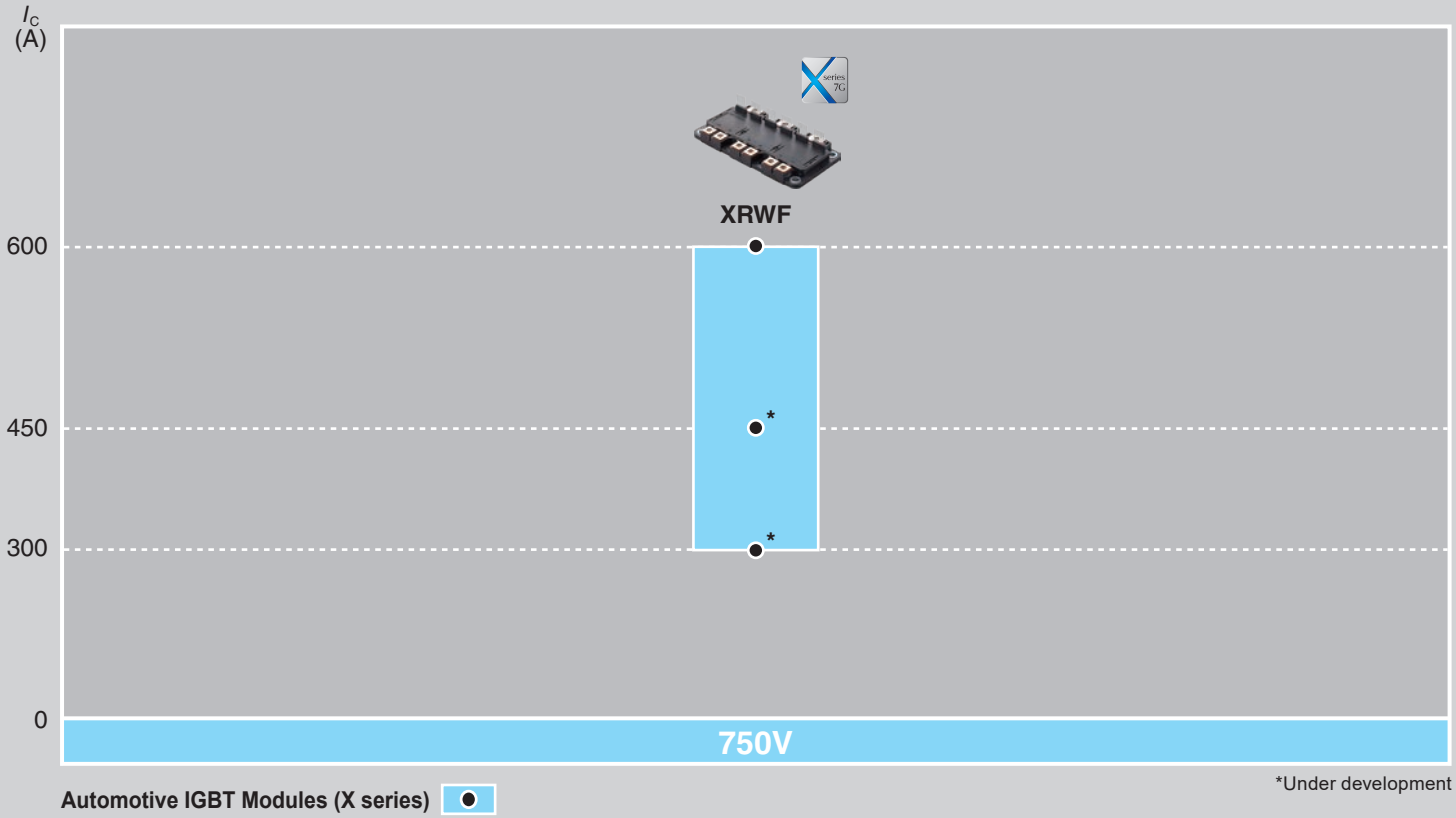

Automotive IGBT Modules (X series)

*Under development

Automotive SiC Modules Products Map

12CSI	I_D	All-SiC series & Package type			
		3G SiC-MOSFET Modules	Size	Page	
		MXHYE	178×112mm	32	

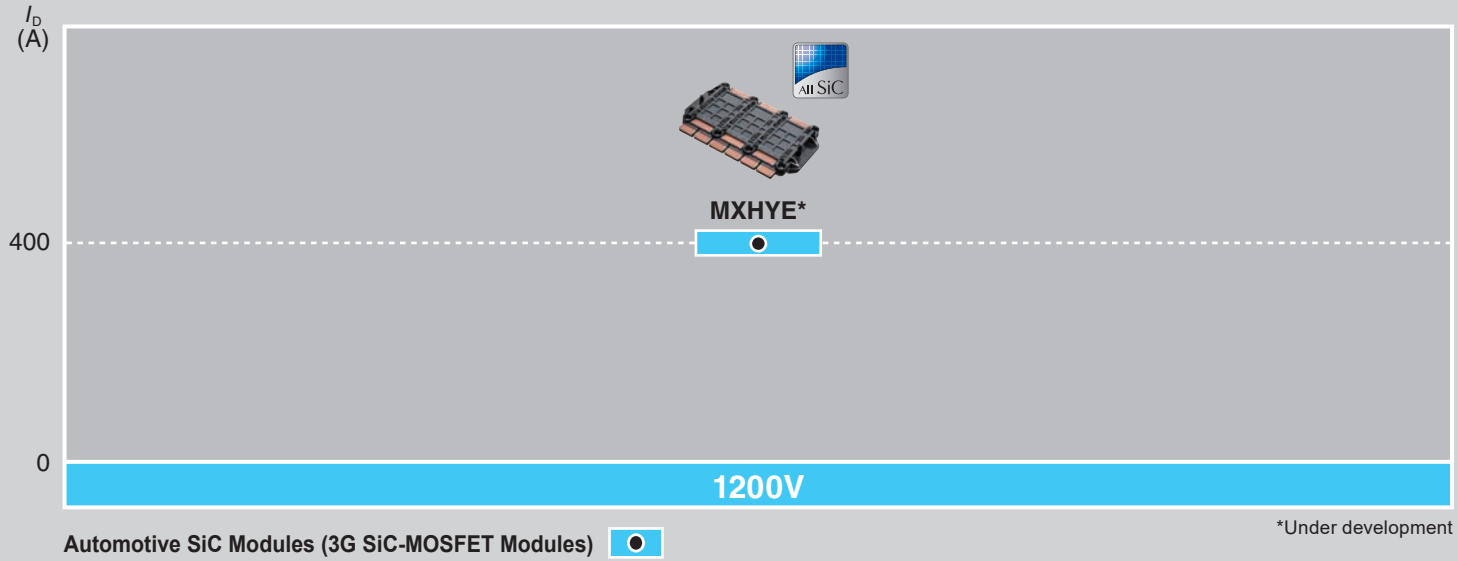

*Under development

Small IPM (Intelligent Power Modules)

Built-in protection functions

- P-side fault status output (Alarm)
- N-side fault status output (Alarm)
- Under voltage protection (self shutdown)
- Over current protection (self shutdown)
- Overheating protection (self shutdown)
- Temperature sensor output (Vtemp, out)

Dimension[mm]

Small IPM with High Voltage Driver-IC without Brake-Chopper

							600 / 650V X series	
							Ic	
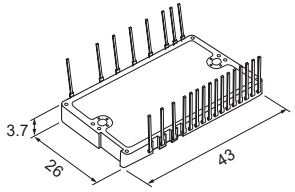 P633A	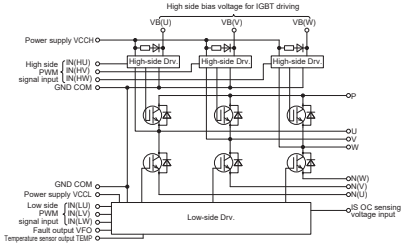	✓	–	✓	✓	✓	–	15A	6MBP15XSD060-50
								20A	6MBP20XSD060-50
								30A	6MBP30XSD060-50
								35A	6MBP35XSD060-50
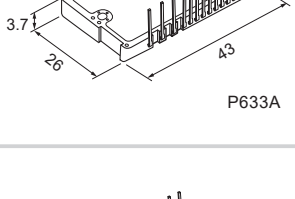 P633A		✓	✓	✓	✓	✓	–	15A	6MBP15XSF060-50
								20A	6MBP20XSF060-50
								30A	6MBP30XSF060-50
								35A	6MBP35XSF060-50
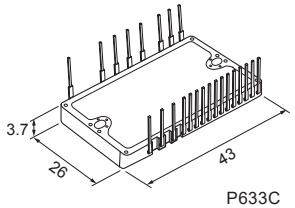 P633C	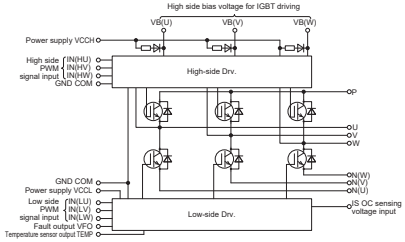	✓	–	✓	✓	✓	–	15A	6MBP15XSJ065-50
								20A	6MBP20XSJ065-50
								30A	6MBP30XSJ065-50
								35A	6MBP35XSJ065-50
P633C		✓	✓	✓	✓	✓	–	15A	6MBP15XSK065-50
								20A	6MBP20XSK065-50
								30A	6MBP30XSK065-50
								35A	6MBP35XSK065-50
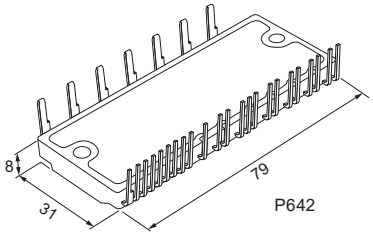 P642	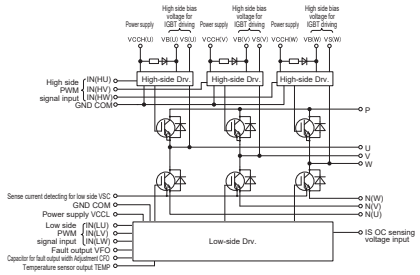	✓	–	✓	✓	✓	–	50A	6MBP50XTA065-50
								75A	6MBP75XTA065-50
P642		✓	✓	✓	✓	✓	–	50A	6MBP50XTC065-50
								75A	6MBP75XTC065-50
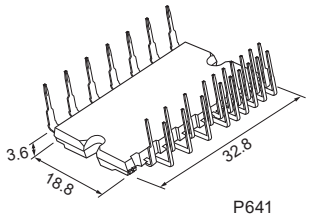 P641	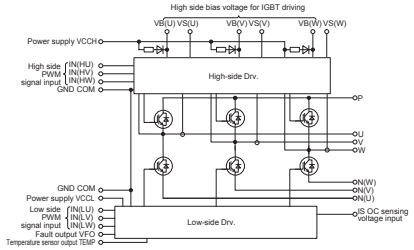	✓	✓	✓	✓	✓	–	20A	6MBP20XRVF065-50
								30A	6MBP30XRVF065-50
								40A	6MBP40XRVF065-50

IPM (Intelligent Power Modules)

Built-in protection functions

- P-side fault status output (Alarm)
- N-side fault status output (Alarm)
- Under voltage protection (self shutdown)
- Over current protection (self shutdown)
- Overheating protection (self shutdown)

Dimension[mm]

							Ic	650V X series	600V V series	1200V X series	1200V V series
Without Brake-Chopper	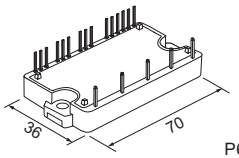 P639	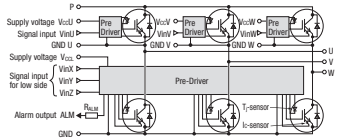	✓	✓	✓	✓	–	10A			6MBP10XRHA120-50	
								20A	6MBP20XRHA065-50			
								30A	6MBP30XRHA065-50			
	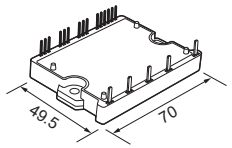 P629	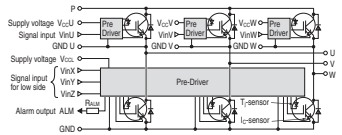	✓	✓	✓	✓	–	10A				6MBP10VAA120-50
								15A				6MBP15VAA120-50
								20A		6MBP20VAA060-50		
								25A			6MBP25XAA120-50	6MBP25VAA120-50
								30A		6MBP30VAA060-50		
								35A			6MBP35XAA120-50	
								50A	6MBP50XAA065-50	6MBP50VAA060-50		
								75A	6MBP75XAA065-50			
	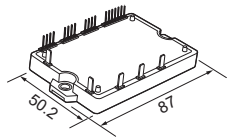 P626	・6MBP□XBA□-50 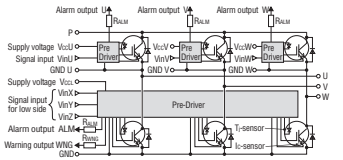 ・6MBP□VBA□-50 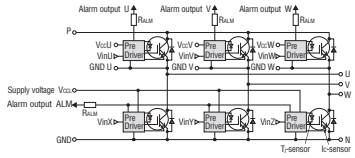	✓	✓	✓	✓	✓	25A			6MBP25XBA120-50	6MBP25VBA120-50
								35A			6MBP35XBA120-50	6MBP35VBA120-50
								50A	6MBP50XBA065-50	6MBP50VBA060-50	6MBP50XBA120-50	6MBP50VBA120-50
								75A	6MBP75XBA065-50	6MBP75VBA060-50		
								100A	6MBP100XBA065-50			
With Brake-Chopper	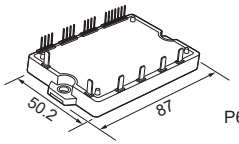 P644	・7MBP□XJN□-50 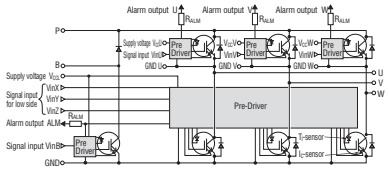	✓	✓	✓	✓	✓	25A			7MBP25XJN120-50	
								35A			7MBP35XJN120-50	
								50A	7MBP50XJN065-50			
								75A	7MBP75XJN065-50			

IPM (Intelligent Power Modules)

Built-in protection functions

- P-side fault status output (Alarm)
- N-side fault status output (Alarm)
- Under voltage protection (self shutdown)
- Over current protection (self shutdown)
- Overheating protection (self shutdown)

Dimension[mm]

								650V	600V	1200V
								X series	V series	X series / V series
Without Brake-Chopper	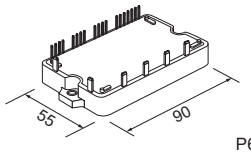 P636	・6MBP□XFN□-50 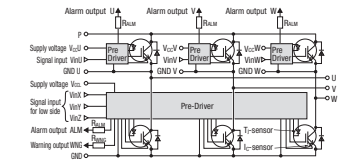 ・6MBP□VFN□-50 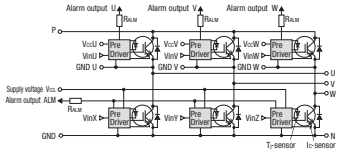	✓	✓	✓	✓	✓	25A		6MBP25VFN120-50
								35A		6MBP35VFN120-50
								50A	6MBP50VFN060-50	6MBP50XFN120-50 / 6MBP50VFN120-50
								75A	6MBP75VFN060-50	
								100A	6MBP100XFN065-50	6MBP100VFN060-50
With Brake-Chopper		・7MBP□XFN□-50 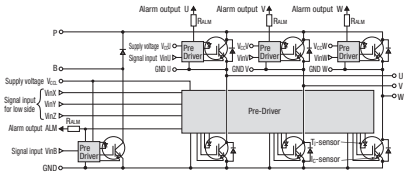 ・7MBP□VFN□-50 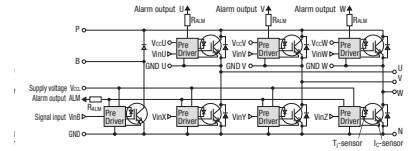	✓	✓	✓	✓	✓	25A		7MBP25VFN120-50
								35A		7MBP35VFN120-50
								50A	7MBP50VFN060-50	7MBP50XFN120-50 / 7MBP50VFN120-50
								75A	7MBP75VFN060-50	
								100A	7MBP100XFN065-50	7MBP100VFN060-50
Without Brake-Chopper	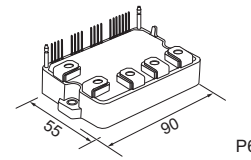 P638	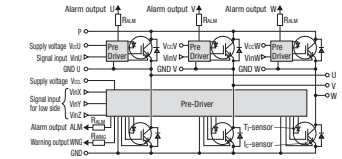	✓	✓	✓	✓	✓	50A		6MBP50XGN120-50
								75A		6MBP75XGN120-50
								100A	6MBP100XGN065-50	
								150A	6MBP150XGN065-50	

Built-in protection functions

P-side fault status output (Alarm)
N-side fault status output (Alarm)
Under voltage protection (self shutdown)
Over current protection (self shutdown)
Overheating protection (self shutdown)

IPM (Intelligent Power Modules)

Dimension[mm]

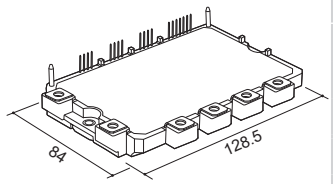

P630

Without Brake-Chopper

- 6MBP□XDA□-50
- 6MBP□XDN□-50

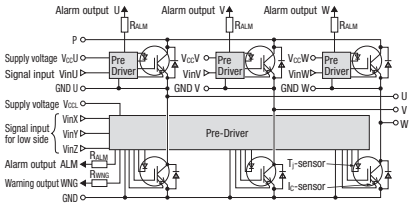

- 6MBP□VDA□-50
- 6MBP□VDN□-50

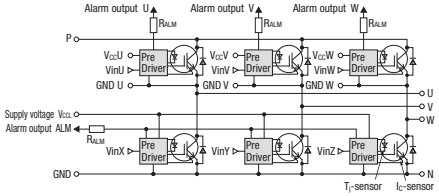

With Brake-Chopper

- 7MBP□XDA□-50
- 7MBP□XDN□-50

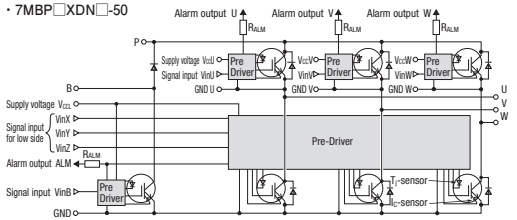

- 7MBP□VDA□-50
- 7MBP□VDN□-50

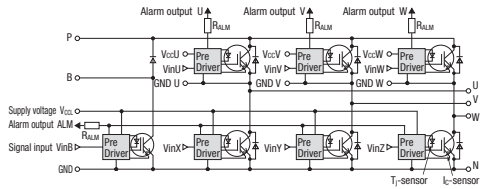

						650V	600V	1200V	
					Ic	X series	V series	X series	V series
Without Brake-Chopper	✓	✓	✓	✓	✓				6MBP25VDA120-50
					25A				6MBP35VDA120-50
					35A				
					50A		6MBP50VDA060-50	6MBP50XDA120-50	6MBP50VDA120-50
									6MBP50VDN120-50
					75A		6MBP75VDA060-50	6MBP75XDA120-50	6MBP75VDA120-50
								6MBP75XDN120-50	6MBP75VDN120-50
					100A	6MBP100XDA065-50	6MBP100VDA060-50	6MBP100XDA120-50	6MBP100VDA120-50
							6MBP100VDN060-50	6MBP100XDN120-50	6MBP100VDN120-50
					150A	6MBP150XDA065-50	6MBP150VDA060-50		
						6MBP150XDN065-50	6MBP150VDN060-50	6MBP150XDN120-50	
					200A		6MBP200VDA060-50		
						6MBP200XDN065-50	6MBP200VDN060-50		
					250A				
						6MBP250XDN065-50			
With Brake-Chopper	✓	✓	✓	✓	✓				7MBP25VDA120-50
					25A				7MBP35VDA120-50
					35A				
					50A		7MBP50VDA060-50	7MBP50XDA120-50	7MBP50VDA120-50
									7MBP50VDN120-50
					75A		7MBP75VDA060-50	7MBP75XDA120-50	7MBP75VDA120-50
								7MBP75XDN120-50	7MBP75VDN120-50
					100A	7MBP100XDA065-50	7MBP100VDA060-50	7MBP100XDA120-50	7MBP100VDA120-50
							7MBP100VDN060-50	7MBP100XDN120-50	7MBP100VDN120-50
					150A	7MBP150XDA065-50	7MBP150VDA060-50		
						7MBP150XDN065-50	7MBP150VDN060-50	7MBP150XDN120-50	
					200A		7MBP200VDA060-50		
						7MBP200XDN065-50	7MBP200VDN060-50		
					250A				
						7MBP250XDN065-50			

Note: The products with 'VDN,XDN' on this page have Low Thermal Impedance Version.

IPM (Intelligent Power Modules)

Built-in protection functions

P-side fault status output (Alarm)
N-side fault status output (Alarm)
Under voltage protection (self shutdown)
Over current protection (self shutdown)
Overheating protection (self shutdown)

Dimension[mm]

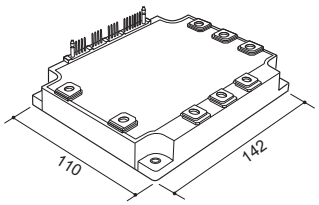

P631

Without Brake-Chopper

・6MBP□XEN□-50

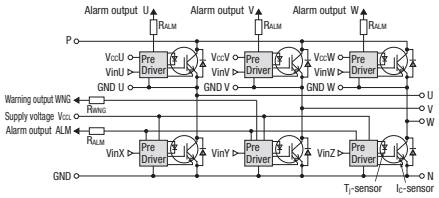

・6MBP□VEA□-50

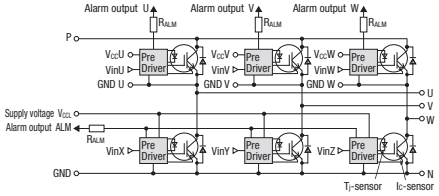

With Brake-Chopper

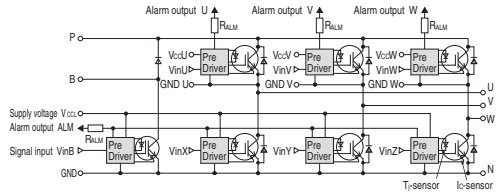

	Ic	650V X series	600V V series	1200V X series	1200V V series
Without Brake-Chopper	100A			6MBP100XEN120-50	6MBP100VEA120-50
	150A			6MBP150XEN120-50	6MBP150VEA120-50
	200A	6MBP200XEN065-50	6MBP200VEA060-50	6MBP200XEN120-50	6MBP200VEA120-50
	300A	6MBP300XEN065-50	6MBP300VEA060-50	6MBP300XEN120-50	
	400A		6MBP400VEA060-50		
	450A	6MBP450XEN065-50			
With Brake-Chopper	100A			7MBP100XEN120-50	7MBP100VEA120-50
	150A			7MBP150XEN120-50	7MBP150VEA120-50
	200A	7MBP200XEN065-50	7MBP200VEA060-50	7MBP200XEN120-50	7MBP200VEA120-50
	300A	7MBP300XEN065-50	7MBP300VEA060-50	7MBP300XEN120-50	
	400A		7MBP400VEA060-50		
	450A	7MBP450XEN065-50			

Small PIM (Power Integrated Modules)

Dimension[mm]

With NTC, Press fit pins

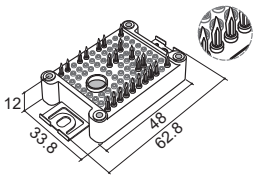

X: M730, V: M726

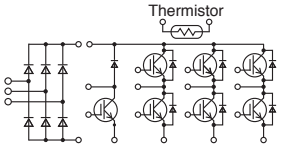

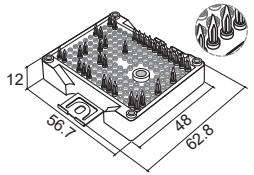

X: M731, V: M727

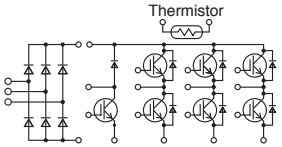

XKB, VKB

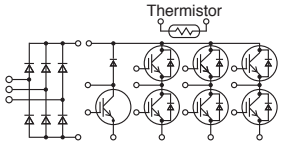

XRKB

With NTC, Solder pins

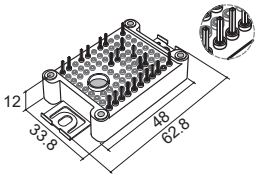

X: M732, V: M728

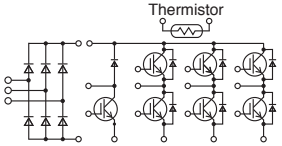

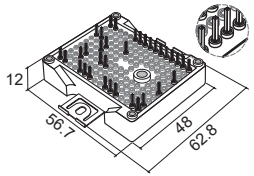

X: M733, V: M729

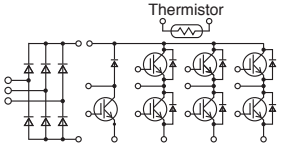

XKD, VKD

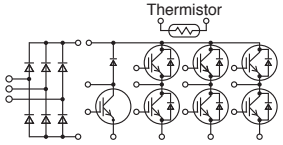

XRKD

Ic	650V X series	600V V series	1200V X series	1200V V series
10A	7MBR10XKA065-50	7MBR10VKA060-50	7MBR10XKA120-50	7MBR10VKA120-50
15A	7MBR15XKA065-50	7MBR15VKA060-50	7MBR15XKA120-50	7MBR15VKA120-50
20A	7MBR20XKA065-50	7MBR20VKA060-50		
25A			7MBR25XKA120-50	
30A	7MBR30XKA065-50	7MBR30VKA060-50		
15A			7MBR15XKB120-50	7MBR15VKB120-50
25A			7MBR25XKB120-50	7MBR25VKB120-50
35A			7MBR35XKB120-50	7MBR35VKB120-50
50A	7MBR50XKB065-50	7MBR50VKB060-50	7MBR50XRKB120-50	
10A	7MBR10XKC065-50	7MBR10VKC060-50	7MBR10XKC120-50	7MBR10VKC120-50
15A	7MBR15XKC065-50	7MBR15VKC060-50	7MBR15XKC120-50	7MBR15VKC120-50
20A	7MBR20XKC065-50	7MBR20VKC060-50		
25A			7MBR25XKC120-50	
30A	7MBR30XKC065-50	7MBR30VKC060-50		
15A			7MBR15XKD120-50	7MBR15VKD120-50
25A			7MBR25XKD120-50	7MBR25VKD120-50
35A			7MBR35XKD120-50	7MBR35VKD120-50
50A	7MBR50XKD065-50	7MBR50VKD060-50	7MBR50XRKD120-50	

PIM (Power Integrated Modules) EconoPIM™

With NTC, Solder pins, PIM

Dimension[mm]	Ic	650V X series	600V V series	1200V X series	1200V V series
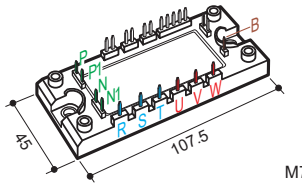 M711 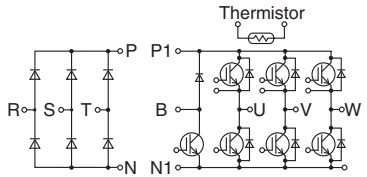	25A				7MBR25VA120-50
	35A				7MBR35VA120-50
	50A		7MBR50VA060-50		
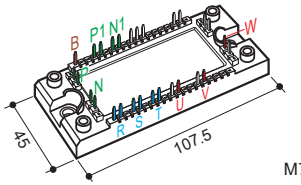 M719 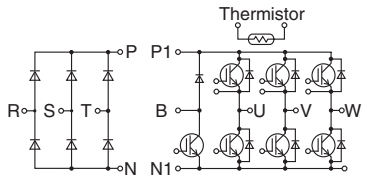	25A				7MBR25VM120-50
	35A			7MBR35XMA120-50	7MBR35VM120-50
	50A	7MBR50XMA065-50		7MBR50XMA120-50	7MBR50VM120-50
	75A	7MBR75XMA065-50		7MBR75XME120-50	
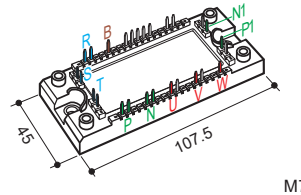 M719 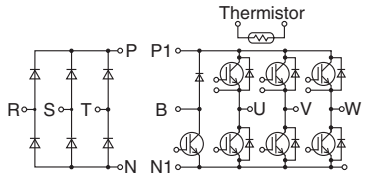	25A				7MBR25VP120-50
	35A			7MBR35XPA120-50	7MBR35VP120-50
	50A	7MBR50XPA065-50	7MBR50VP060-50	7MBR50XPA120-50	7MBR50VP120-50
				7MBR50XPE120-50	
	75A	7MBR75XPA065-50	7MBR75VP060-50	7MBR75XPE120-50	
	100A	7MBR100XPE065-50	7MBR100VP060-50		
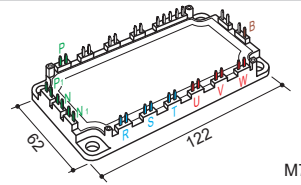 M712 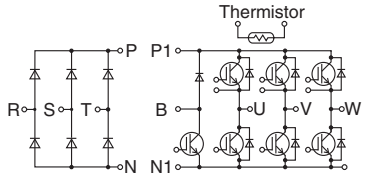	35A				7MBR35VB120-50
	50A				7MBR50VB120-50
	75A		7MBR75VB060-50		7MBR75VB120-50
	100A		7MBR100VB060-50		
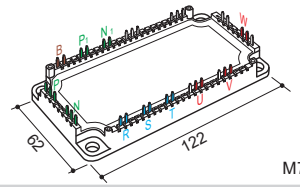 M720 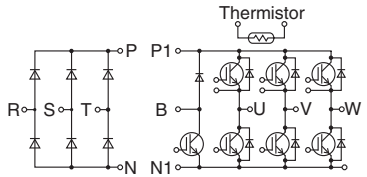	50A				7MBR50VN120-50
	75A	7MBR75XNA065-50		7MBR75XNA120-50	7MBR75VN120-50
	100A	7MBR100XNA065-50		7MBR100XNA120-50	7MBR100VN120-50
	150A	7MBR150XNA065-50		7MBR150XNE120-50	7MBR150VN120-50
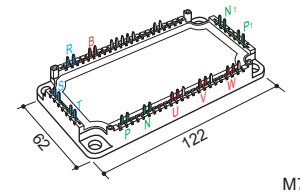 M720 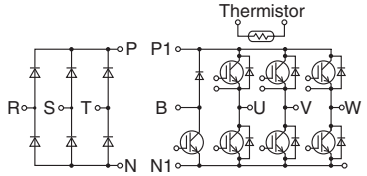	50A				7MBR50VR120-50
	75A			7MBR75XRA120-50	7MBR75VR120-50
				7MBR75XRE120-50	
	100A	7MBR100XRA065-50	7MBR100VR060-50	7MBR100XRA120-50	7MBR100VR120-50
				7MBR100XRE120-50	
	150A	7MBR150XRA065-50	7MBR150VR060-50	7MBR150XRE120-50	7MBR150VR120-50
		7MBR150XRE065-50			

Note1: EconoPIM™ is registered trademark of Infineon Technologies AG, Germany.
Note2: The range of modules with pre-applied TIM (Thermal-Interface-Material) is being continually expanded.

PIM (Power Integrated Modules) EconoPIM™

With NTC, Press fit pins, PIM

Dimension[mm]

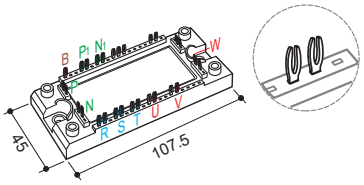

M721

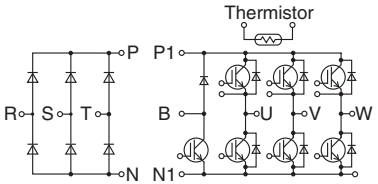

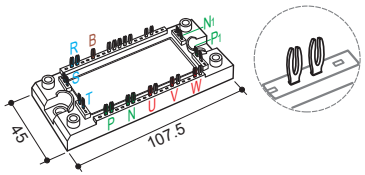

M721

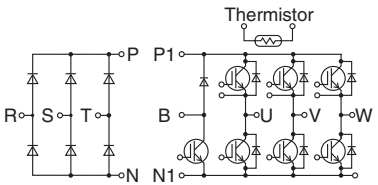

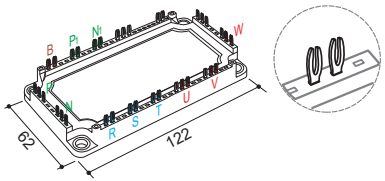

M722

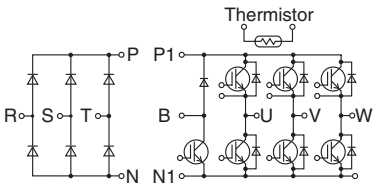

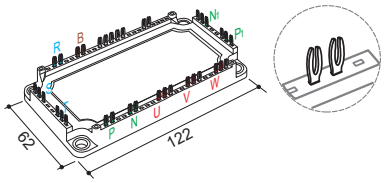

M722

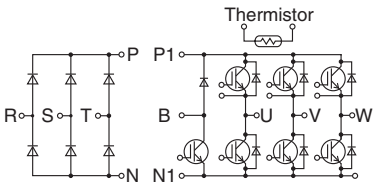

	650V	600V	1200V	
Ic	X series	V series	X series	V series
25A				7MBR25VW120-50
35A			7MBR35XWA120-50	7MBR35VW120-50
50A	7MBR50XWA065-50		7MBR50XWA120-50	7MBR50VW120-50
75A	7MBR75XWA065-50		7MBR75XWE120-50	
25A				7MBR25VY120-50
35A			7MBR35XYA120-50	7MBR35VY120-50
50A	7MBR50XYA065-50	7MBR50VY060-50	7MBR50XYA120-50	7MBR50VY120-50
75A	7MBR75XYA065-50	7MBR75VY060-50	7MBR75XYE120-50	
100A	7MBR100XYE065-50	7MBR100VY060-50		
50A				7MBR50VX120-50
75A	7MBR75XXA065-50		7MBR75XXA120-50	7MBR75VX120-50
100A	7MBR100XXA065-50		7MBR100XXA120-50	7MBR100VX120-50
150A	7MBR150XXA065-50		7MBR150XXE120-50	7MBR150VX120-50
50A				7MBR50VZ120-50
75A			7MBR75XZA120-50	7MBR75VZ120-50
100A	7MBR100XZA065-50	7MBR100VZ060-50	7MBR100XZA120-50	7MBR100VZ120-50
150A	7MBR150XZA065-50	7MBR150VZ060-50	7MBR150XZE120-50	7MBR150VZ120-50

Note1: EconoPIM™ is registered trademark of Infineon Technologies AG, Germany.
Note2: The range of modules with pre-applied TIM (Thermal-Interface-Material) is being continually expanded.

6-Pack EconoPACK™

With NTC, Solder pins

Dimension[mm]	Ic	600V V series	1200V X series	1200V V series
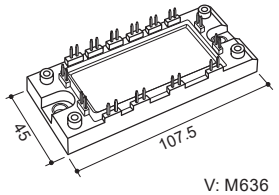 V: M636 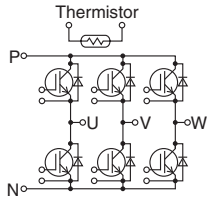	50A	6MBI50VA-060-50		6MBI50VA-120-50
	75A	6MBI75VA-060-50		6MBI75VA-120-50
	100A	6MBI100VA-060-50		6MBI100VA-120-50
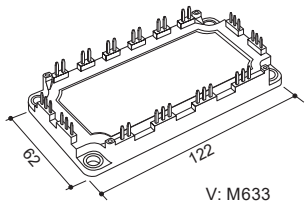 V: M633 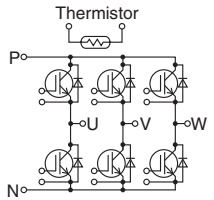	100A			6MBI100VB-120-50
	150A	6MBI150VB-060-50		6MBI150VB-120-50
	180A			6MBI180VB-120-50
				6MBI180VB-120-55
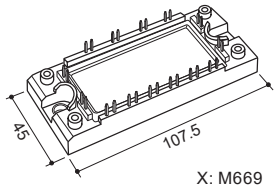 X: M669 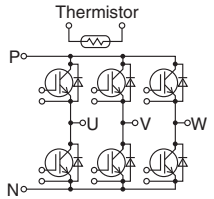	100A		6MBI100XAE120-50	
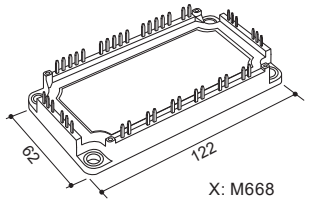 X: M668 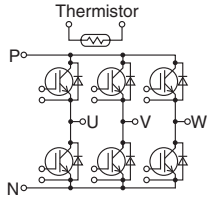	100A		6MBI100XBA120-50	
	150A		6MBI150XBA120-50	
	200A		6MBI200XBA120-50	
			6MBI200XBE120-50	

Note1: 6MBI180VB-120-55; Low Thermal Impedance Version
Note2: EconoPACK™ is registered trademark of Infineon Technologies AG, Germany.
Note3: The range of modules with pre-applied TIM (Thermal-Interface-Material) is being continually expanded.

6-Pack EconoPACK™

With NTC, Press fit pins

Dimension[mm]

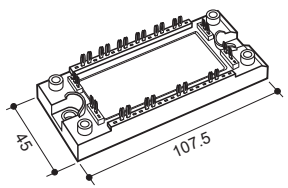

M647



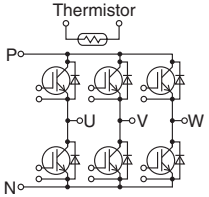

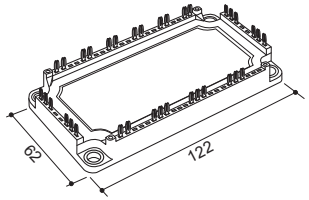

M648



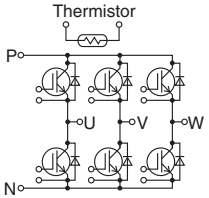

Ic	600V	1200V		1700V
	V series	X series	V series	V series
50A	6MBI50VW-060-50		6MBI50VW-120-50	
75A	6MBI75VW-060-50		6MBI75VW-120-50	
100A	6MBI100VW-060-50	6MBI100XWE120-50	6MBI100VW-120-50	
100A		6MBI100XXA120-50	6MBI100VX-120-50	6MBI100VX-170-50
150A	6MBI150VX-060-50	6MBI150XXA120-50	6MBI150VX-120-50	
180A			6MBI180VX-120-50	
			6MBI180VX-120-55	
200A		6MBI200XXA120-50		
		6MBI200XXE120-50		

Note1: 6MBI180VX-120-55; Premium type (Low Thermal Impedance Version)
Note2: The range of modules with pre-applied TIM (Thermal-Interface-Material) is being continually expanded.
Note3: EconoPACK™ is registered trademark of Infineon Technologies AG, Germany.

Standard 2-Pack

2-Pack

Dimension[mm]

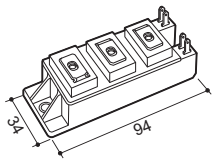

M263

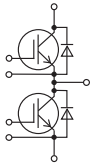

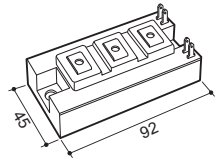

M274

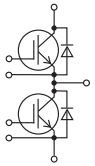

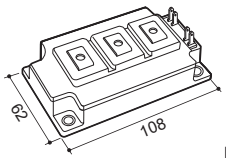

M275

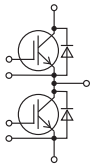

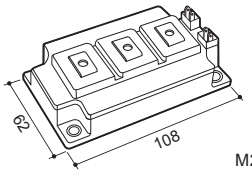

M276

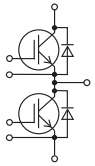

*1

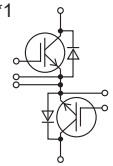

Common Emitter

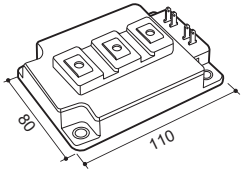

M277

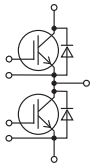

Ic	650V X series	600V V series	1200V X series	1200V V series	1700V X series	1700V V series
75A				2MBI75VA-120-50	2MBI75XAA170-50	2MBI75VA-170-50
100A		2MBI100VA-060-50	2MBI100XAA120-50	2MBI100VA-120-50	2MBI100XAA170-50	2MBI100VA-170-50
150A	2MBI150XAA065-50	2MBI150VA-060-50	2MBI150XAA120-50	2MBI150VA-120-50	2MBI150XAA170-50	
200A	2MBI200XAA065-50	2MBI200VA-060-50	2MBI200XAA120-50			
150A				2MBI150VB-120-50		
200A			2MBI200XBE120-50	2MBI200VB-120-50		
300A	2MBI300XBE065-50	2MBI300VB-060-50	2MBI300XBE120-50			
400A	2MBI400XBE065-50	2MBI400VB-060-50				
300A				2MBI300VD-120-50		
400A	2MBI400XDE065-50	2MBI400VD-060-50	2MBI400XDE120-50	2MBI400VD-120-50		
600A	2MBI600XDE065-50	2MBI600VD-060-50	2MBI600XDE120-50			
150A					2MBI150XHA170-50	2MBI150VH-170-50
200A				2MBI200VH-120-50	2MBI200XHA170-50	2MBI200VH-170-50
300A			2MBI300XHA120-50	2MBI300VH-120-50	2MBI300XHA170-50	2MBI300VH-170-50
400A					2MBI400XHA170-50	
					2MBI400XHA170-81*2	
450A			2MBI450XHA120-50	2MBI450VH-120-50		
			2MBI450XHA120-81*2	2MBI450VH-120F-50*1		
600A			2MBI600XHA120-50			
			2MBI600XHA120-81*2			
800A			2MBI800XHA120-50*2			
			2MBI800XHA120A-50*2			
			2MBI800XHA120F-50*1 *2			
300A				2MBI300VE-120-50	2MBI300XEE170-50	2MBI300VE-170-50
400A					2MBI400XEE170-50	2MBI400VE-170-50
450A			2MBI450XEE120-50	2MBI450VE-120-50		
600A	2MBI600XEE065-50	2MBI600VE-060-50	2MBI600XEE120-50	2MBI600VE-120-50		

Note1: “-81” : Pre-applied Thermal-Interface-Material for “-50”.
Note2: The range of modules with pre-applied TIM (Thermal-Interface-Material) is being continually expanded.

*2 Under development

Standard 2-Pack

Dimension[mm]

		Ic	1200V			1700V		
			X series	V series	V series With SiN substrate *1	X series	V series	V series With SiN substrate *1
With NTC, Solder pins	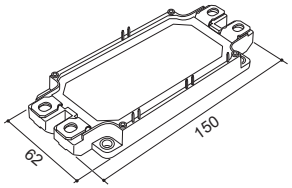 M254 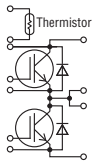	225A	2MBI225XNA120-50	2MBI225VN-120-50	2MBI225VN-120S-50	2MBI225XNA170-50		
			2MBI225XNA120-81					
		300A	2MBI300XNA120-50	2MBI300VN-120-50	2MBI300VN-120S-50	2MBI300XNA170-50	2MBI300VN-170-50	
		450A	2MBI450XNA120-50	2MBI450VN-120-50	2MBI450VN-120S-50	2MBI450XNA170-50	2MBI450VN-170-50	
		550A						2MBI550VN-170-50
		600A	2MBI600XNG120-50 *1		2MBI600VN-120-50	2MBI600XNG170-50 *1		
	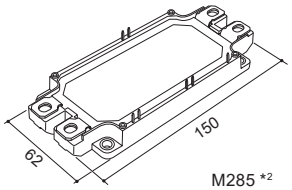 M285 *2 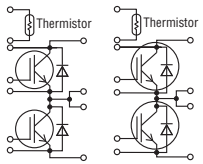 XNE XRNE	600A	2MBI600XNE120-50 *1			2MBI600XNE170-50 *1		
		800A	2MBI800XNE120-50 *1			2MBI800XRNE170-50 *1		
		1000A	2MBI1000XRNE120-50 *1					
With NTC, Press fit pins	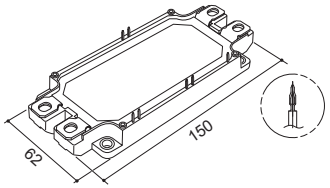 M282 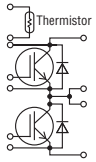	225A	2MBI225XNB120-50	2MBI225VX-120-50		2MBI225XNB170-50	2MBI225VX-170-50	
		300A	2MBI300XNB120-50	2MBI300VX-120-50		2MBI300XNB170-50	2MBI300VX-170-50	
			2MBI300XNB120-81					
		450A	2MBI450XNB120-50	2MBI450VX-120-50		2MBI450XNB170-50	2MBI450VX-170-50	
			2MBI450XNB120-81					
		550A						2MBI550VX-170-50
		600A	2MBI600XNH120-50 *1		2MBI600VX-120-50	2MBI600XNH170-50 *1		
			2MBI600XNH120-81 *1					
	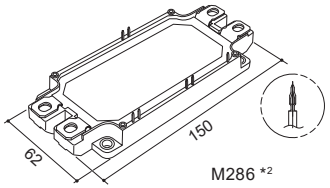 M286 *2 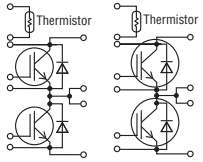 XNF XRNF	600A	2MBI600XNF120-50 *1			2MBI600XNF170-50 *1		
		800A	2MBI800XNF120-50 *1			2MBI800XRNF170-50 *1		
			2MBI800XNF120-81 *1					
		1000A	2MBI1000XRNF120-50 *1					
			2MBI1000XRNF120-81 *1					

Note1: “-81” : Pre-applied Thermal-Interface-Material for “-50”.
Note2: The range of modules with pre-applied TIM (Thermal-Interface-Material) is being continually expanded.

*1 Low thermal impedance version
*2 Low thermal impedance and high tracking capability type

Standard 1-Pack

Dimension[mm]

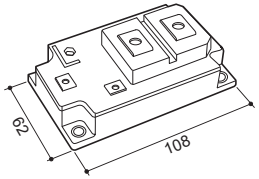

M153

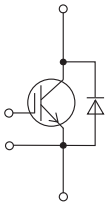

Ic	1200V V series	1200V V series with AlN substrate	1700V V series
400A	1MBI400V-120-50	1MBI400VF-120-50	1MBI400V-170-50
600A	1MBI600V-120-50	1MBI600VF-120-50	1MBI600V-170-50
900A	1MBI900V-120-50		

Chopper

Dimension[mm]

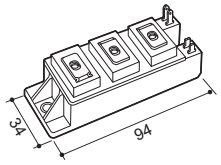

M262

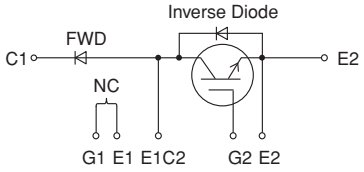

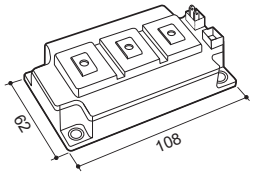

M283

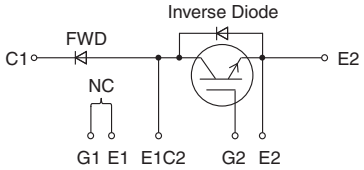

Ic	600V V series	1200V V series
150A		1MBI150VA-120L-50
200A		1MBI200VA-120L-50
400A	1MBI400VH-060L-50	

High Power Module HPnC

		Dimension[mm]	*Ic*	1700V X series	2300V X series	3300V X series
2-Pack	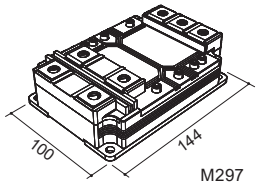 M297	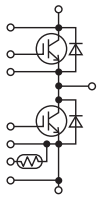	450A			2MBI450XYF330-50*2
			600A			2MBI600XYF330-50*2
			1200A	2MBI1200XYF170-50		
			1500A	2MBI1500XYF170-50		
	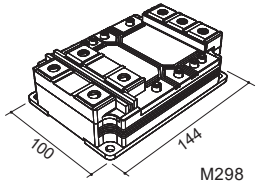 M298	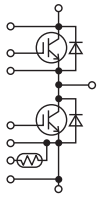	1200A	2MBI1200XZF170-50	2MBI1200XZF230-50	
					2MBI1200XZG230-50*1	
			1500A	2MBI1500XZF170-50		
			1800A	2MBI1800XZF170-50		

*1 V_{isol} = 6kV

*2 Under development

Note1: M297 : Mgsic-baseplate, M298 : Cu-baseplate.

Note2: The range of modules with pre-applied TIM (Thermal-Interface-Material) is being continually expanded.

PrimePACK™

2-Pack

Dimension[mm]	Ic	1200V X series (Soft turn off)	1200V V series (Low switching loss)	1200V V series (Soft turn off)	1700V X series	1700V V series (Low switching loss)	1700V V series (Soft turn off)
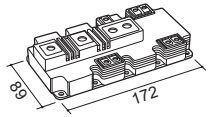 M271 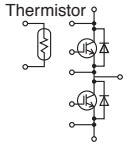	600A		2MBI600VXA-120E-50				
			2MBI600VXA-120E-54				
	650A				2MBI650XXA170-50	2MBI650VXA-170E-50	
						2MBI650VXA-170E-54	
						2MBI650VXA-170EA-50	
						2MBI650VXA-170EA-54	
	900A	2MBI900XXA120P-50	2MBI900VXA-120E-50	2MBI900VXA-120P-50			
		2MBI900XXA120P-81*	2MBI900VXA-120E-54	2MBI900VXA-120P-54			
	1200A	2MBI1200XXE120P-50			2MBI1200XXE170-50		
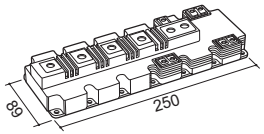 M272 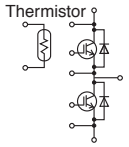	1000A				2MBI1000XXB170-50	2MBI1000VXB-170E-50	
						2MBI1000VXB-170E-54	
						2MBI1000VXB-170EA-50	
						2MBI1000VXB-170EA-54	
	1400A	2MBI1400XXB120P-50	2MBI1400VXB-120E-50	2MBI1400VXB-120P-50	2MBI1400XXB170-50	2MBI1400VXB-170E-50	2MBI1400VXB-170P-50
		2MBI1400XXB120P-81*	2MBI1400VXB-120E-54	2MBI1400VXB-120P-54		2MBI1400VXB-170E-54	2MBI1400VXB-170P-54
	1800A	2MBI1800XXF120P-50			2MBI1800XXF170-50		
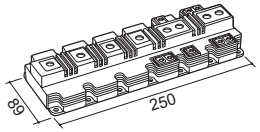 M291 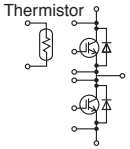 XXG 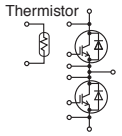 XRXG	1800A	2MBI1800XXG120P-50			2MBI1800XXG170-50		
		2MBI1800XXG120P-81*			2MBI1800XXG170-81		
	2400A	2MBI2400XRXG120-50			2MBI2400XRXG170-50*		
		2MBI2400XRXG120-81					

Note1: The products with suffix '-54' on this page are labeled to specify the rank of $V_{CE(sat)}$ and V_F.
Note2: "-81" : Pre-applied Thermal-Interface-Material for "-50".
Note3: EA types reduce V_F and thermal resistance and are suitable for applications with high diode loads.
Note4: PrimePACK™ is registered trademark of Infineon Technologies AG, Germany.

*Under development

PrimePACK™

Chopper

Dimension[mm]

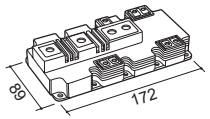

M271

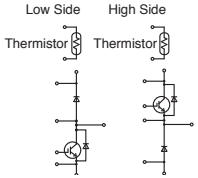

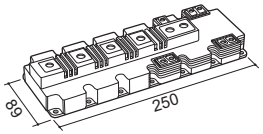

M272

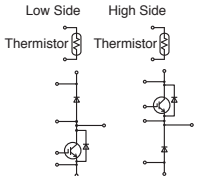

Ic	1200V		1700V	
	V series		V series	
	Low side configuration	High side configuration	Low side configuration	High side configuration
650A			1MBI650VXA-170EL-50	1MBI650VXA-170EH-50
			1MBI650VXA-170EL-54	1MBI650VXA-170EH-54
900A	1MBI900VXA-120PD-50 *1	1MBI900VXA-120PC-50 *1		
	1MBI900VXA-120PD-54 *1	1MBI900VXA-120PC-54 *1		
1000A			1MBI1000VXB-170EL-50	1MBI1000VXB-170EH-50
			1MBI1000VXB-170EL-54	1MBI1000VXB-170EH-54
1400A			1MBI1400VXB-170PL-50	1MBI1400VXB-170PH-50
	1MBI1400VXB-120PL-54	1MBI1400VXB-120PH-54	1MBI1400VXB-170PL-54	1MBI1400VXB-170PH-54

Note1: The products with suffix '-54' on this page are labeled to specify the rank of $V_{CE(sat)}$ and V_F.
Note2: PrimePACK™ is registered trademark of Infineon Technologies AG, Germany.
Note3: The range of modules with pre-applied TIM (Thermal-Interface-Material) is being continually expanded.

*1 Antiparallel diode current rating is 120A. Application circuit is Boost/Buck chopper only.

T-type NPC 3-level Modules

Dimension[mm]

		Ic	600V		1200V		1700V	
			V series	RB-IGBT	V series	RB-IGBT	V series	RB-IGBT
3 Phase With NTC, Solder pins	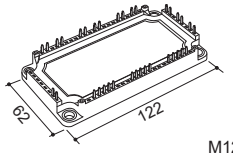 M1203 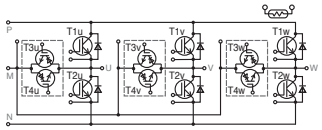	50A			12MBI50VN-120-50	600V		
		75A			12MBI75VN-120-50	600V		
		100A			12MBI100VN-120-50	600V		
3 Phase With NTC, Press fit pins	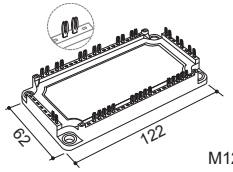 M1202 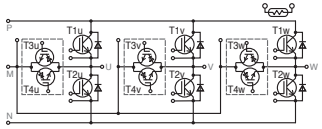	50A			12MBI50VX-120-50	600V		
		75A			12MBI75VX-120-50	600V		
		100A			12MBI100VX-120-50	600V		
1 Phase	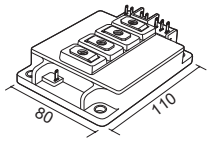 M403 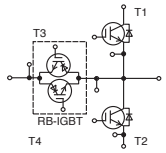	220A					4MBI220VF-170R2-50	1200V
		300A			4MBI300VG-120R-50	600V		
					4MBI300VG-120R1-50	900V		
		340A			4MBI340VF-120R-50	600V		
		400A	4MBI400VG-060R-50	600V	4MBI400VF-120R-50	600V		
1 Phase	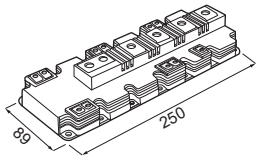 M404 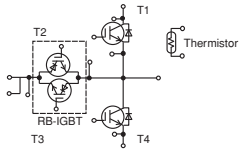	450A			4MBI450VB-120R1-50	900V	4MBI450VB-170R2-50	1200V
					4MBI450VB-120R1-60	900V	4MBI450VB-170R2-60	1200V
		600A					4MBI600VB-170R2-50	1200V
							4MBI600VB-170R2-60	1200V
		650A			4MBI650VB-120R1-50	900V		
					4MBI650VB-120R1-60	900V		
		900A			4MBI900VB-120R1-50	900V		
					4MBI900VB-120R1-60	900V		
					4MBI900VB-120RA-50	600V		
					4MBI900VB-120RA-60	600V		

Note 1: AT-NPC (Advanced T-type Neutral-Point-Clamped) 3-level Module integrates RB-IGBT (Reverse Blocking-IGBT) in addition to ordinary IGBT and FWD in single package.
Note 2: The products with suffix '-60' on this page are labeled the characteristic data.

I-type NPC 3-level Modules

Dimension[mm]

		Ic	600V	1200V	1700V
			V series	V series	V series
1 Phase	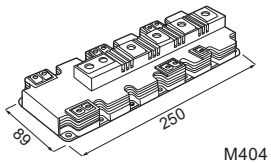 M404 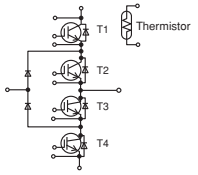	600A		4MBI600VC-120-50	
				4MBI600VC-120-60	

Note: The products with suffix '-60' on this page are labeled the characteristic data.

Hybrid SiC Modules

2-Pack

Dimension[mm]	Ic	1200V V series	1200V VW series	1700V V series
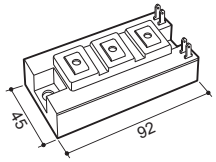 M274 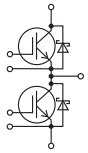	200A	2MSI200VAB-120-53		
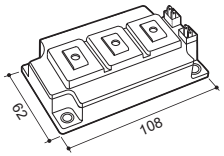 M276 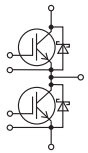	200A		2MSI200VWAH-120-53	
	300A	2MSI300VAH-120C-53	2MSI300VWAH-120-53	
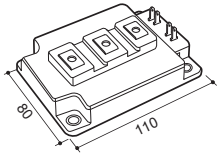 M277 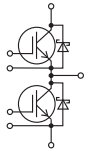	400A			2MSI400VAE-170-53
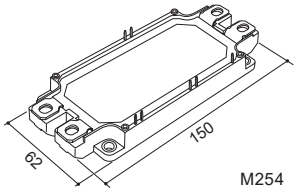 M254 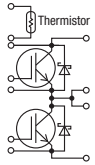	300A	2MSI300VAN-120-53		
	450A	2MSI450VAN-120-53		
	600A	2MSI600VAN-120-53		

All-SiC Modules

	Dimension[mm]	I_D	1200V All SiC 3G SiC-MOSFET Modules	1700V All SiC 3G SiC-MOSFET Modules
2-Pack	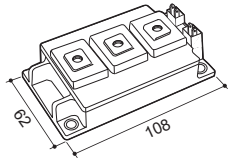 M295 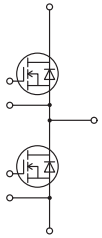	200A		2CI200HHE170-50*
		300A	2CI300HHE120-50*	2CI300HHE170-50*
		400A		2CI400HHE170-50*
		450A	2CI450HHE120-50*	
		600A	2CI600HHE120-50*	

*Under development

High Power Module HPnC (All-SiC)

	Dimension[mm]	I_D	2300V All SiC 3G SiC-MOSFET Modules	3300V All SiC 3G SiC-MOSFET Modules
2-Pack	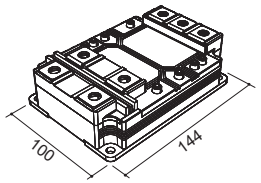 M297 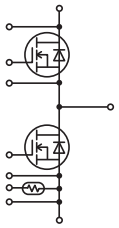	850A		2CI850HYF330-50*
	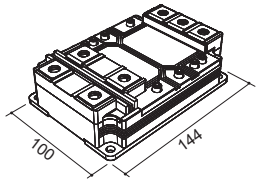 M298 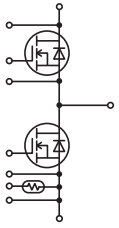	1200A	2CI1200HZF230-50*	

Note: M297: MgSiC-baseplate, M298: Cu-baseplate

*Under development

Automotive IGBT Modules

6-Pack

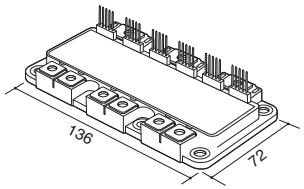

M682

Dimension[mm]

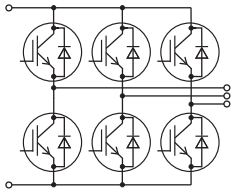

I_C	750V
300A	6MBI300XRWF075V-50*
450A	6MBI450XRWF075V-50*
600A	6MBI600XRWF075V-50

*Under development

Automotive SiC Modules

6-Pack

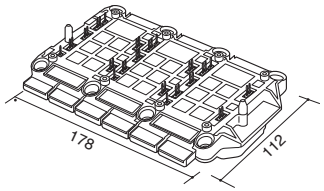

M1206

Dimension[mm]

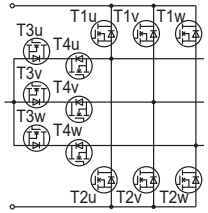

I_D	1200V
400A	12CSI400MXHYE120V-50*

*Under development

Discrete IGBT

		Ic	600V		650V	1200V	
			V series	RB series	XS series	XS series	V series
TO-247 (Type:B)	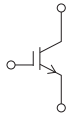	30A			FGW30XS65		
		40A			FGW40XS65	FGW40XS120	
		50A			FGW50XS65		
		75A			FGW75XS65	FGW75XS120	
		15A					FGW15N120VD
		25A					FGW25N120VD
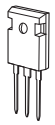	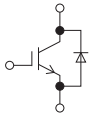	30A	FGW30N60VD		FGW30XS65C		
		40A			FGW40XS65C	FGW40XS120C	FGW40N120VD
		50A	FGW50N60VD		FGW50XS65D		
					FGW50XS65C		
		75A			FGW75XS65D	FGW75XS120C	
					FGW75XS65C		
	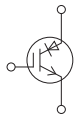 RB-IGBT	85A		FGW85N60RB			
TO-247Plus-3		100A				FGWP100XS120C *	
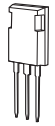	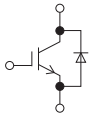	140A				FGWP140XS120C *	
TO-247-4		75A			FGZ75XS65C	FGZ75XS120C	
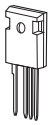	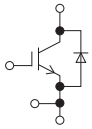						
TO-247Plus-4H		100A				FGZP100XS120C *	
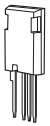	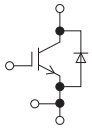	140A				FGZP140XS120C *	

*Under development

SiC Schottky Barrier Diodes (SiC-SBD)

		I_F	650V		1200V	
			SiC-SBD 2G	SiC-SBD 1G	SiC-SBD 2G	SiC-SBD 1G
T-Pack(s)	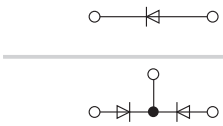	10A		FDCC10S65		
		20A				
		25A		FDCC25S65		
		20A		FDCC20C65		
TO-220-2 (Type:A)	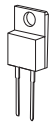	6A	FDC2PT06S65			
		8A	FDC2PT08S65			
		10A	FDC2PT10S65			
TO-220-2 (Type:B)	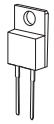	10A		FDCP10S65		
		25A		FDCP25S65		
TO-220	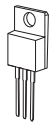	20A		FDCP20C65		
TO-220F	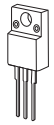	20A		FDCA20C65		
TO-220F-2	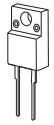	6A	FDC2AT06S65			
		8A	FDC2AT08S65			
		10A	FDC2AT10S65	FDCA10S65		
		18A				FDCA18S120
		25A		FDCA25S65		
TO-247 (Type:A)	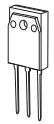	10A		FDCY10S65		
		18A				FDCY18S120
		25A		FDCY25S65		
		20A		FDCY20C65		
		36A				FDCY36C120
		50A		FDCY50C65		
TO-247-2	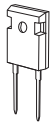	18A				FDCW18T120
		20A			FDC2WT20S120	
		40A			FDC2WT40S120	

Package Outlines, mm

M153

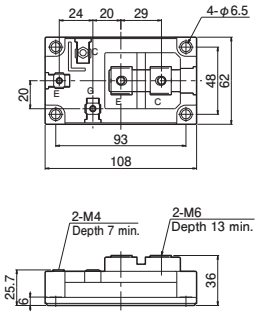

M254

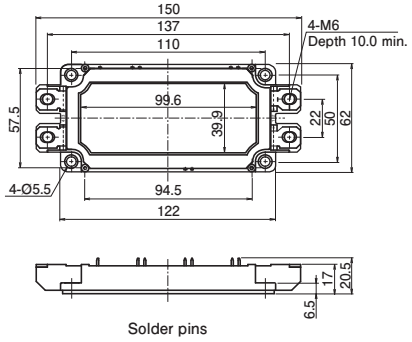

Solder pins

M262

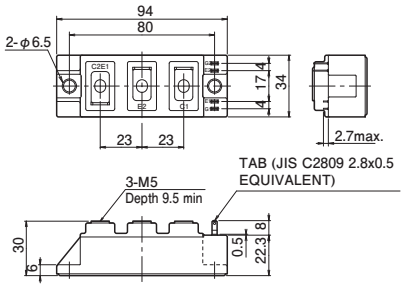

M263

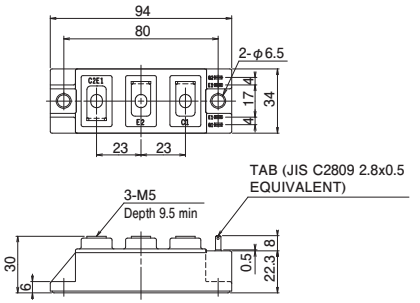

M271

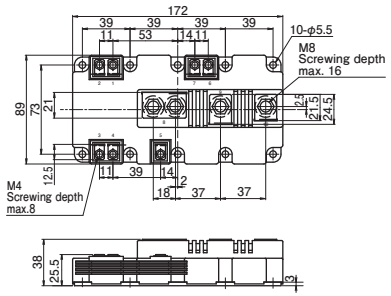

M272

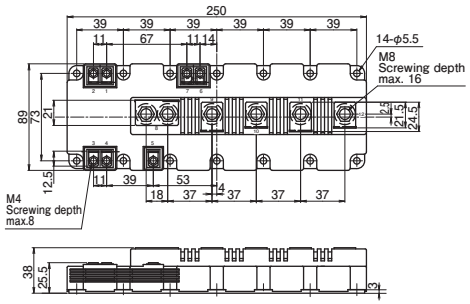

M274

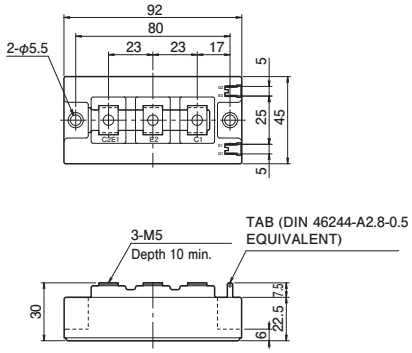

M275

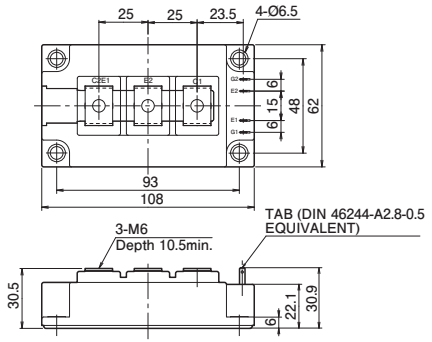

M276

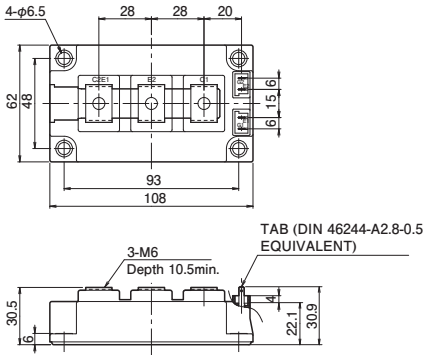

M277

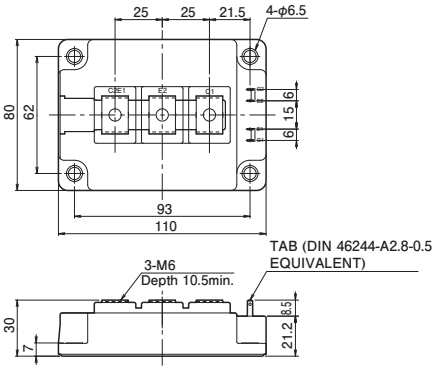

M282

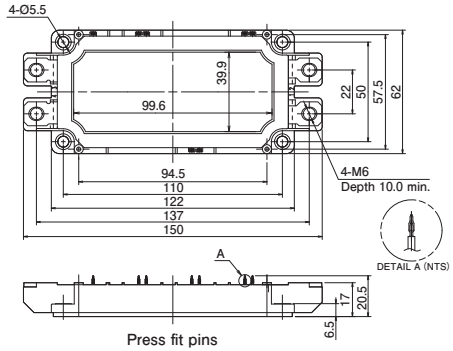

Press fit pins

M283

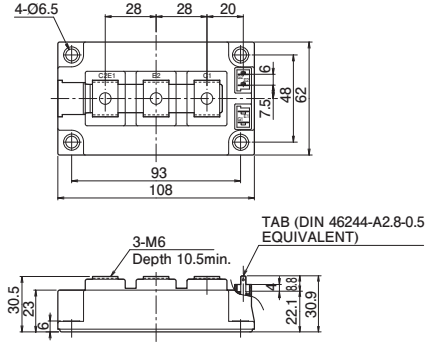

Package Outlines, mm

M285

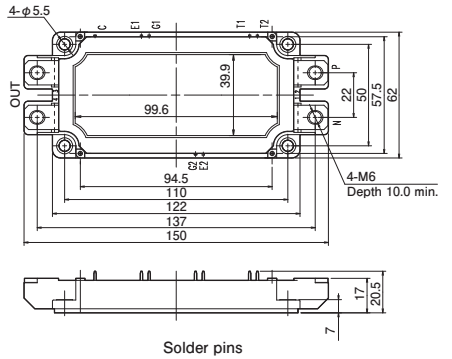

Solder pins

M286

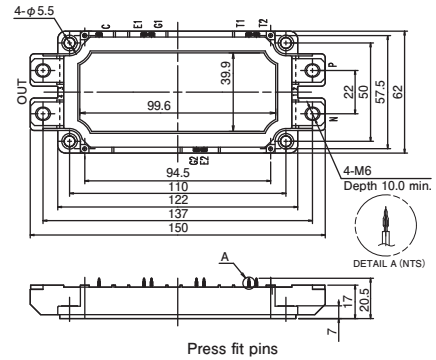

Press fit pins

M291

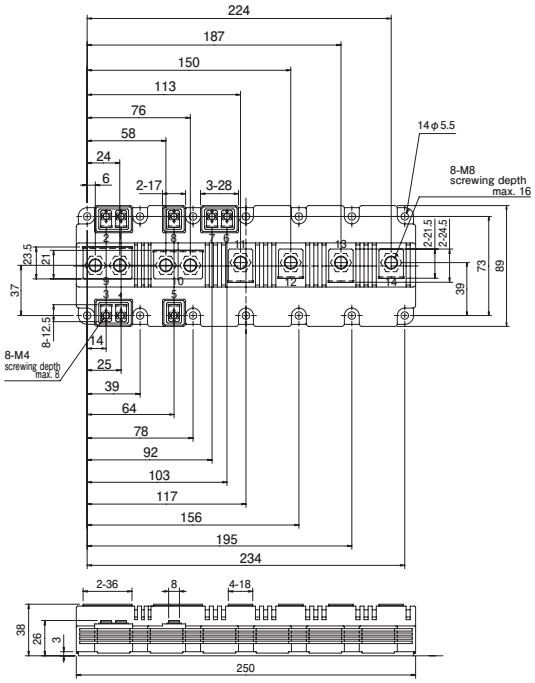

M297, M298

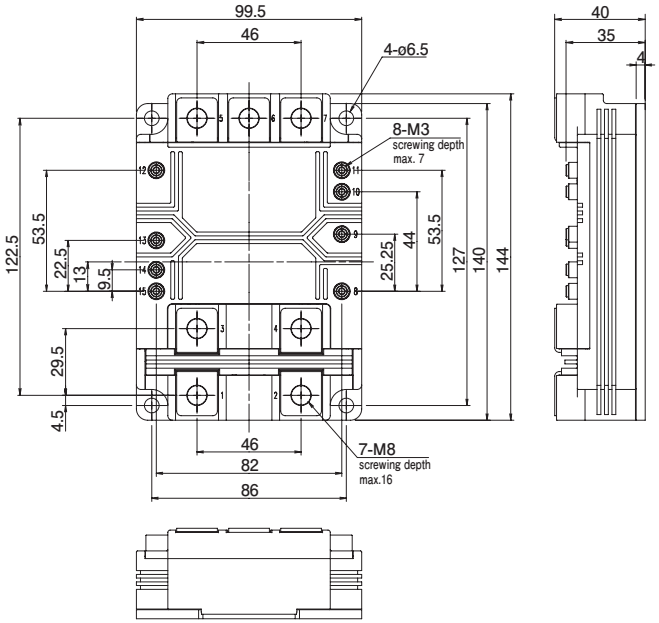

M295

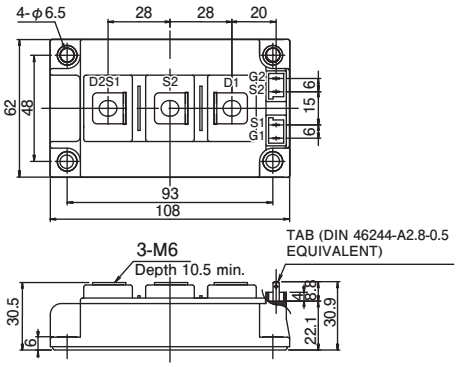

M403

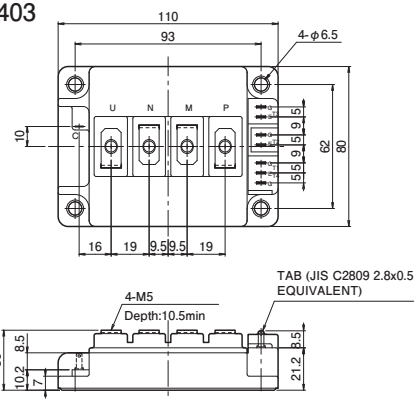

M404

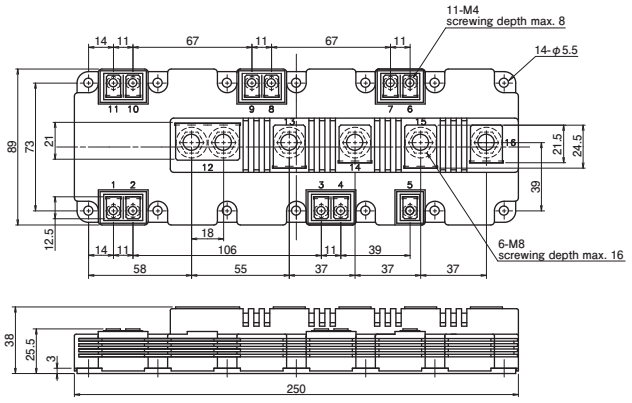

Package Outlines, mm

M633

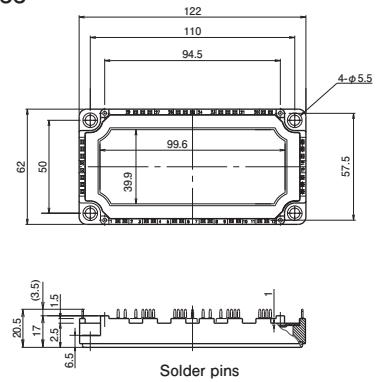

Solder pins

M636

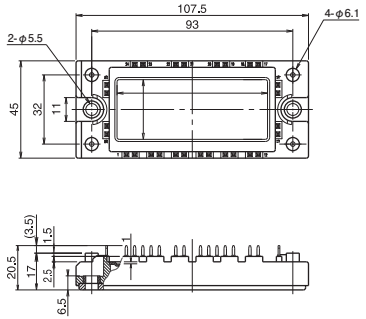

Solder pins

M647

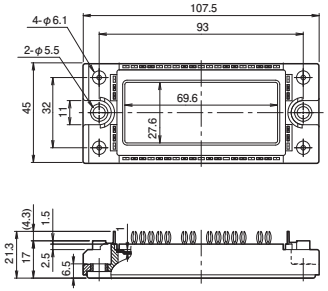

Press fit pins

M648

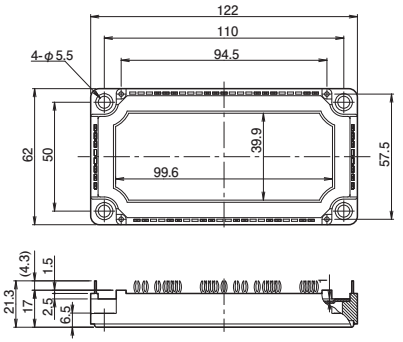

Press fit pins

M668

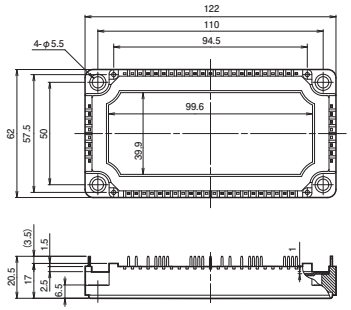

Solder pins

M669

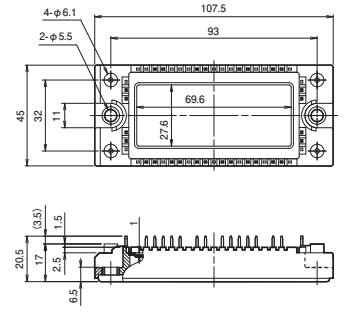

Solder pins

M682 (6MBI300XRWF075V-50, 6MBI450XRWF075V-50)

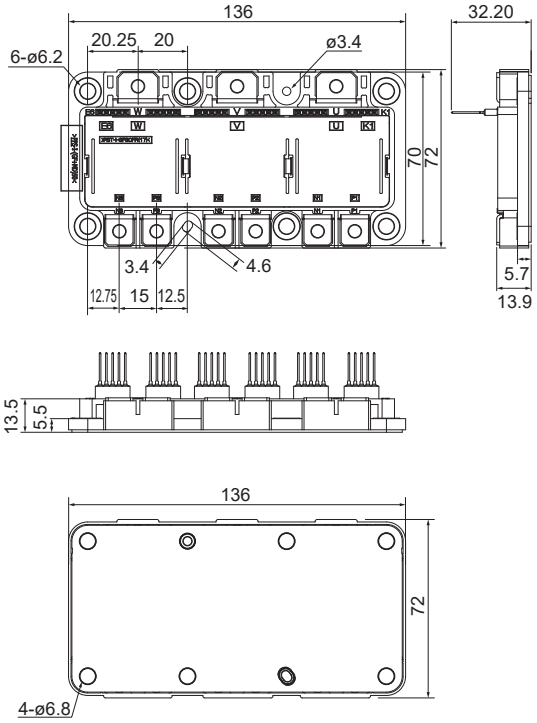

M682 (6MBI600XRWF075V-50)

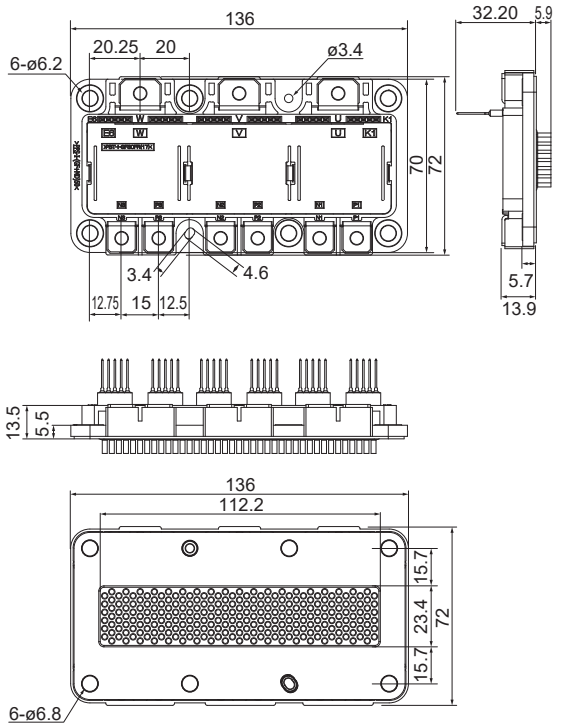

Package Outlines, mm

M711

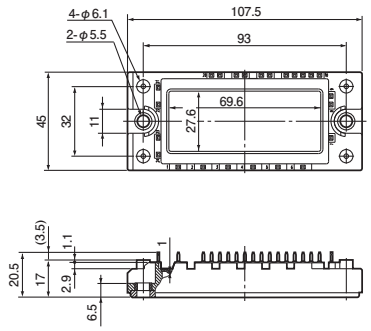

Solder pins

M712

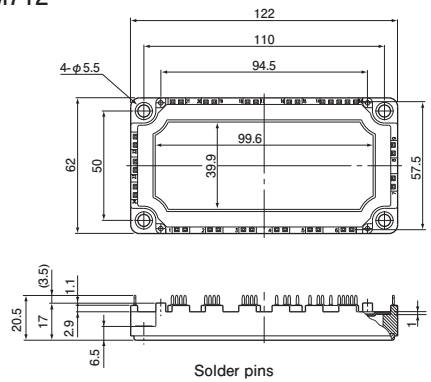

Solder pins

M719

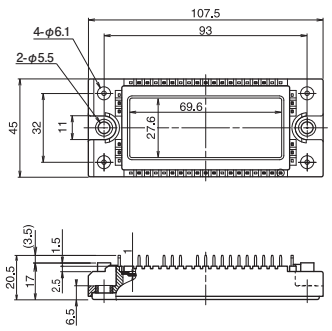

Solder pins

M720

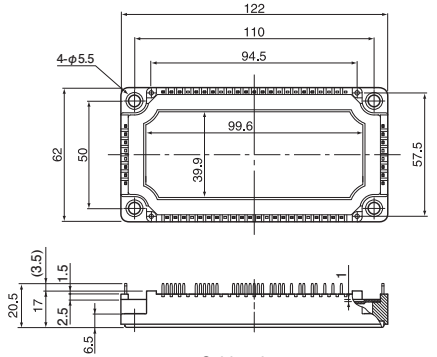

Solder pins

M721

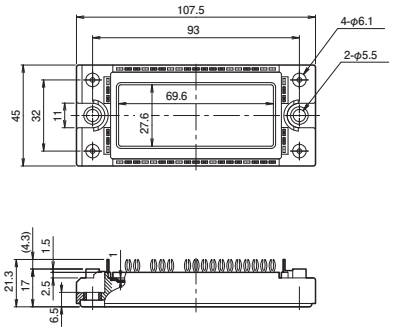

Press fit pins

M722

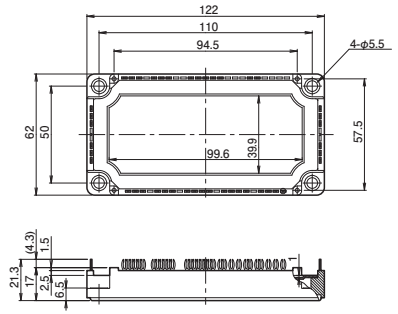

Press fit pins

M726

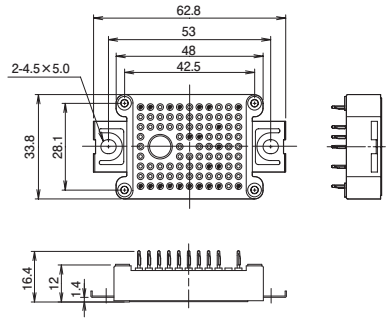

Press fit pins

M727

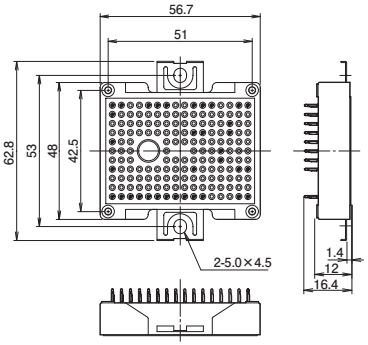

Press fit pins

M728

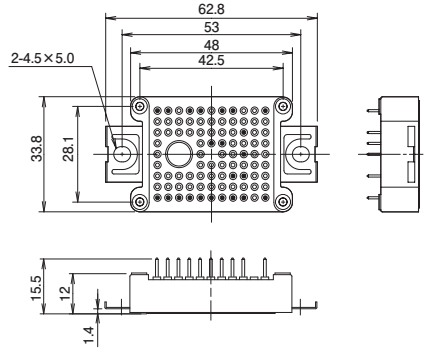

Solder pins

M729

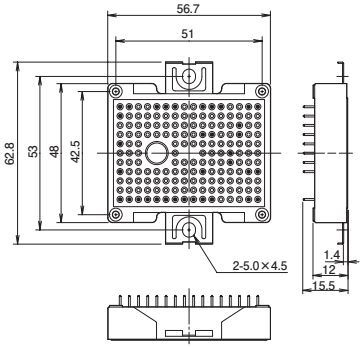

Solder pins

M730

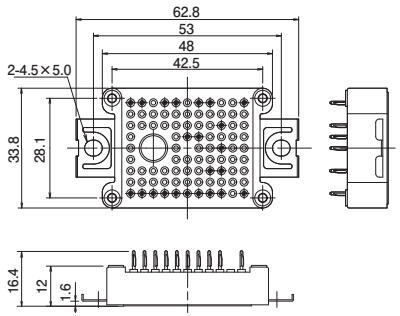

Press fit pins

M731

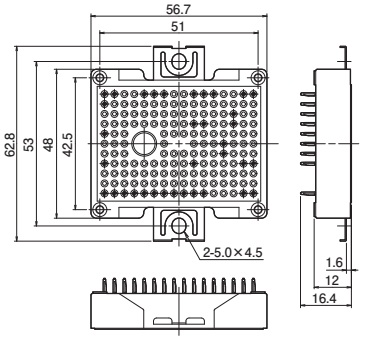

Press fit pins

Package Outlines, mm

M732

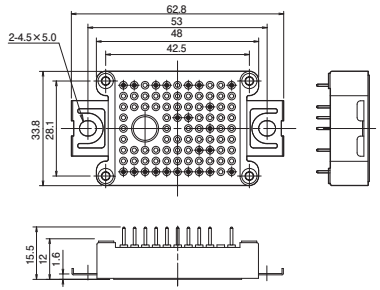

Solder pins

M733

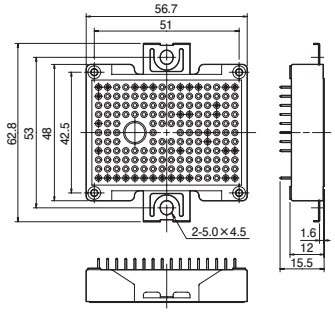

Solder pins

M1202

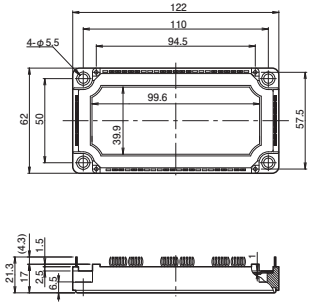

Press fit pins

M1203

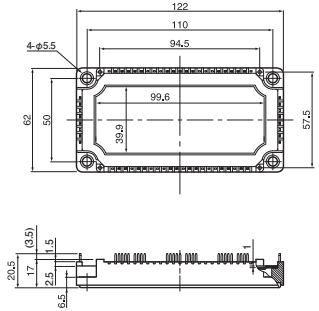

Solder pins

M1206

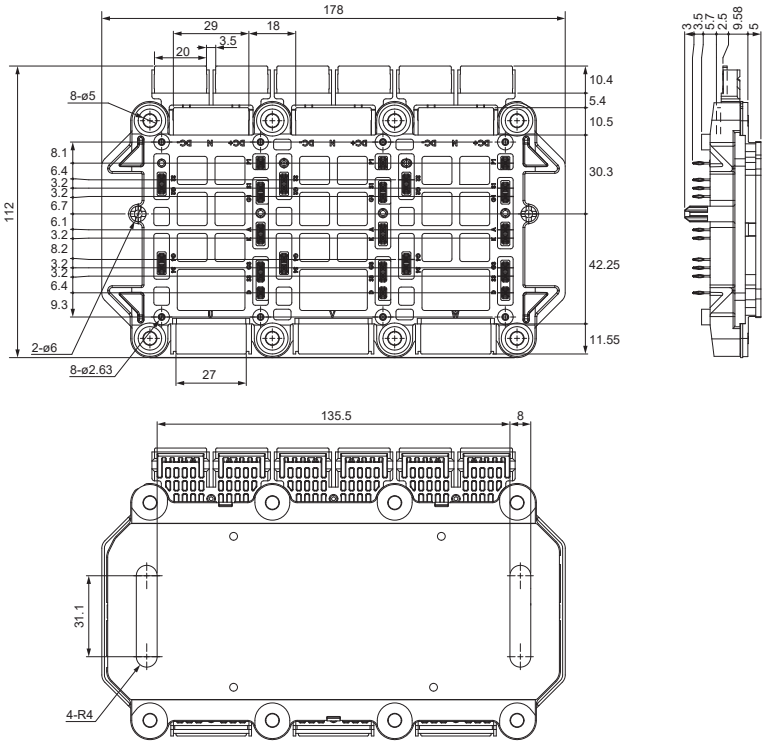

Package Outlines, mm

P626

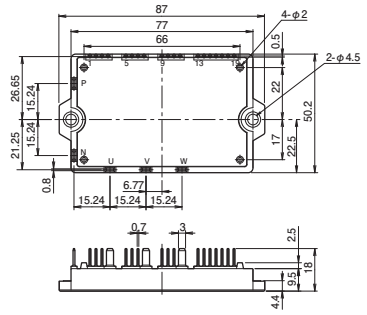

P629

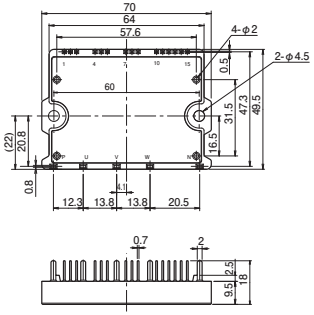

P630

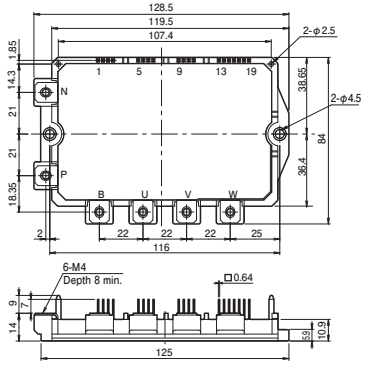

P631

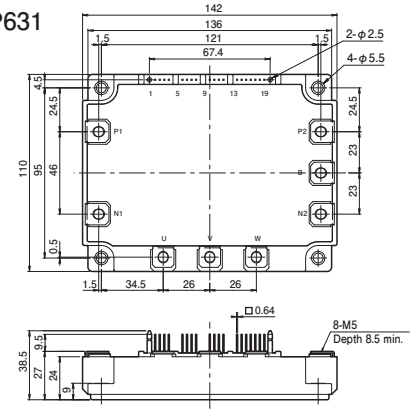

P633A

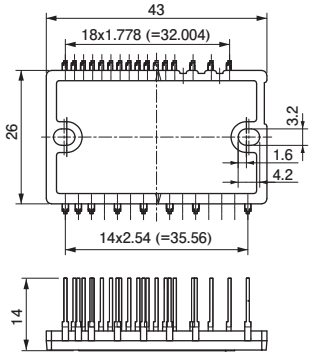

P633C

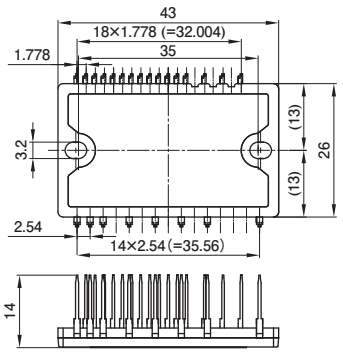

P636

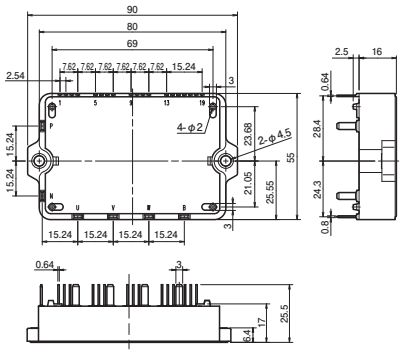

P638

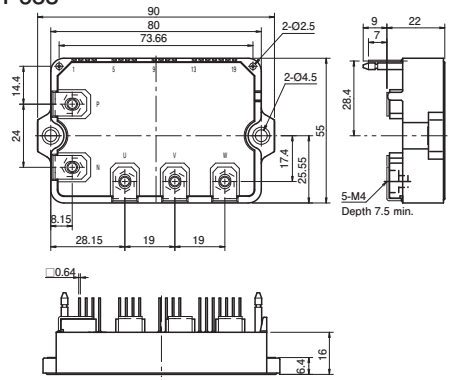

P639

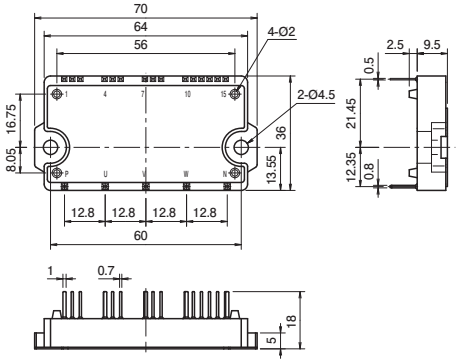

P641

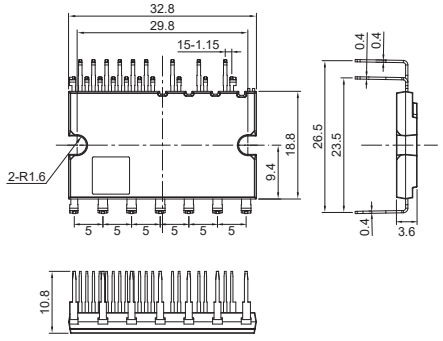

P642

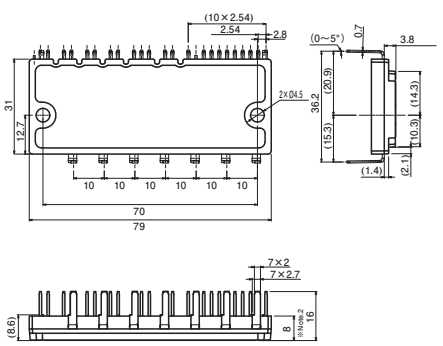

P644

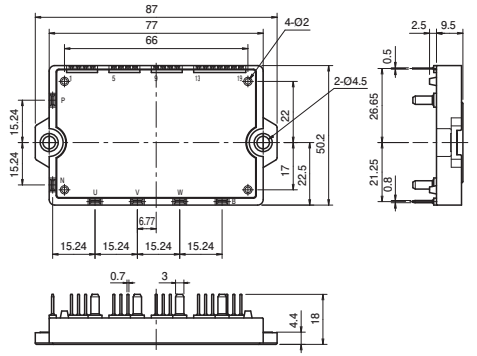

Package Outlines, mm

TO-247 (Type:A)

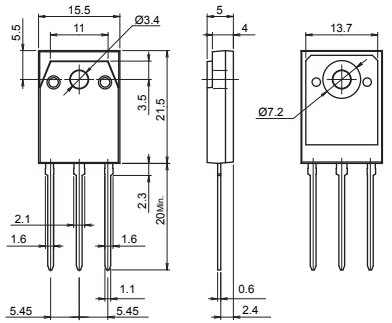

TO-247 (Type:B)

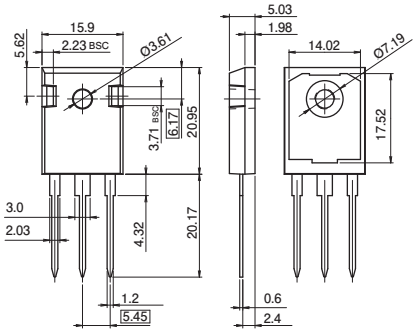

TO-247-2

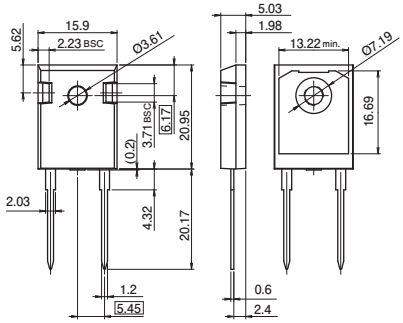

TO-247-4

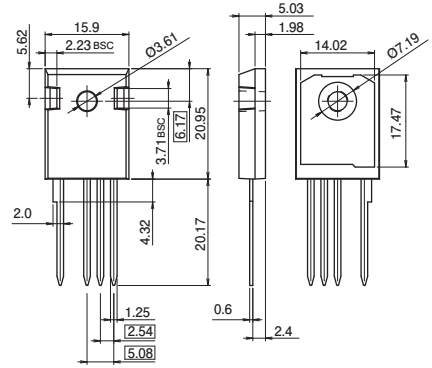

TO-220

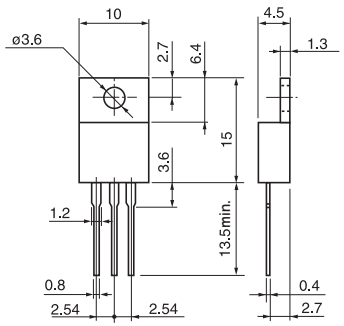

TO-220-2 (Type: A)

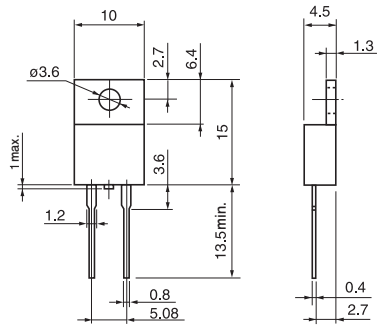

TO-220-2 (Type: B)

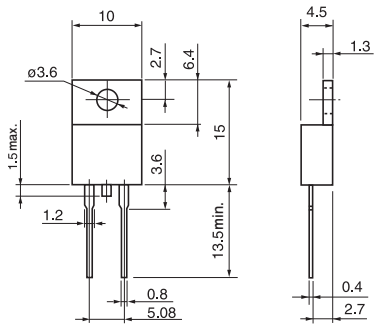

TO-220F

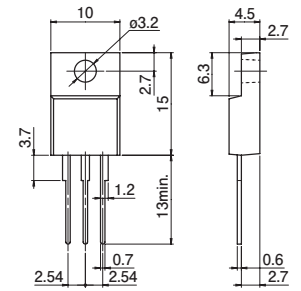

TO-220F-2

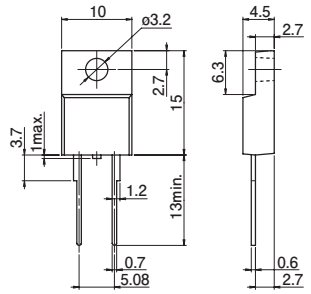

T-Pack(S)

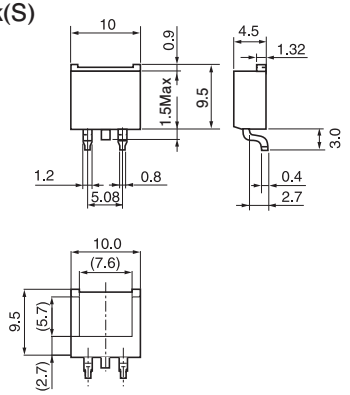

TO-247Plus-3

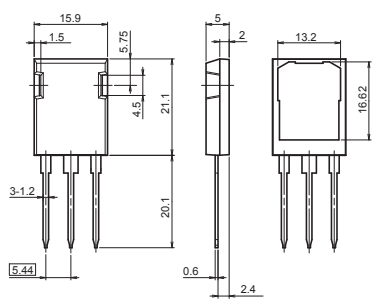

TO-247Plus-4H

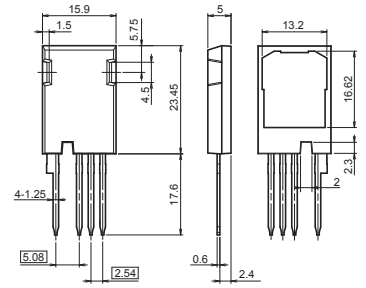

WARNING

1. This Catalog contains the product specifications, characteristics, data, materials, and structures as of March 2026.
   The contents are subject to change without notice for specification changes or other reasons. When using a product listed in this Catalog, be sure to obtain the latest specifications.

2. All applications described in this Catalog exemplify the use of Fuji's products for your reference only. No right or license, either express or implied, under any patent, copyright, trade secret or other intellectual property right owned by Fuji Electric Co., Ltd. is (or shall be deemed) granted. Fuji Electric Co., Ltd. makes no representation or warranty, whether express or implied, relating to the infringement or alleged infringement of other's intellectual property rights which may arise from the use of the applications described herein.

3. Although Fuji Electric Co., Ltd. is enhancing product quality and reliability, a small percentage of semiconductor products may become faulty. When using Fuji Electric semiconductor products in your equipment, you are requested to take adequate safety measures to prevent the equipment from causing a physical injury, fire, or other problem if any of the products become faulty. It is recommended to make your design fail-safe, flame retardant, and free of malfunction.

4. The products introduced in this Catalog are intended for use in the following electronic and electrical equipment which has normal reliability requirements.
   • Computers • OA equipment • Communications equipment (terminal devices) • Measurement equipment
   • Machine tools • Audiovisual equipment • Electrical home appliances • Personal equipment • Industrial robots etc.

5. If you need to use a product in this Catalog for equipment requiring higher reliability than normal, such as for the equipment listed below, it is imperative to contact Fuji Electric Co., Ltd. to obtain prior approval. When using these products for such equipment, take adequate measures such as a backup system to prevent the equipment from malfunctioning even if a Fuji's product incorporated in the equipment becomes faulty.
   • Transportation equipment (mounted on cars and ships) • Trunk communications equipment
   • Traffic-signal control equipment • Gas leakage detectors with an auto-shut-off feature
   • Emergency equipment for responding to disasters and anti-burglary devices • Safety devices
   • Medical equipment

6. Do not use products in this Catalog for the equipment requiring strict reliability such as the following and equivalents to strategic equipment (without limitation).
   • Space equipment • Aeronautic equipment • Nuclear control equipment
   • Submarine repeater equipment

7. Copyright ©1996-2025 by Fuji Electric Co., Ltd. All rights reserved.
   No part of this Catalog may be reproduced in any form or by any means without the express permission of Fuji Electric Co., Ltd.

8. If you have any question about any portion in this Catalog, ask Fuji Electric Co., Ltd. or its sales agents before using the product.
   Neither Fuji Electric Co., Ltd. nor its agents shall be liable for any injury caused by any use of the products not in accordance with instructions set forth herein.

Notes on export:
If you export this product, please obtain an export license or approval if necessary, in accordance with the export control laws and regulations of the country where you are located and the U.S. re-export regulations .

Fuji Electric Co., Ltd.

Power Semiconductors Group
www.fujielectric.com/products/semiconductor/

Head Office:
Gate City Ohsaki, East Tower, 11-2 Osaki 1-chome,
Shinagawa-ku, Tokyo 141-0032, Japan

Fuji Electric Hong Kong Co., Ltd.
Unit 1601-03 & 05, 16/F., Tower II, Grand Century Place,
No. 193 Prince Edward Road West, Mongkok, Kowloon, Hong Kong
Tel: +852-2664-8699

Fuji Electric Taiwan Co., Ltd.
5F. No.168, Song Jiang Road, Taipei, Taiwan
Tel: +886-2-2511-1820

Fuji Electric Asia Pacific Pte. Ltd.
151 Lorong Chuan, #03-01/01A New Tech Park, SINGAPORE 556741
Tel: +65-6533-0014

Fuji Electric India Private Ltd.
119(Part), 120, 120A, Electrical and Electronics Industrial Estate,
Perungudi, Chennai - 600096, Tamil Nadu, India
Tel: +91-44-40004200

Fuji Electric (China) Co., Ltd.
26F, Global Harbor Tower B,
1188 North KaiXuan Road, PuTuo District,
Shanghai 200062, P.R.China
Tel: +86-21-5496-1177

Fuji Electric Corp. of America
50 Northfield Avenue
Edison, NJ 08837, USA
Tel: +1-732-560-9410

Fuji Electric Europe GmbH
Goethering 58, 63067 Offenbach am Main, F.R. GERMANY
Tel: +49-69-6690290

VEGETABLE OIL INK

Information in this catalog is subject to change without notice.
* The photo on the cover shows just one example of the many applications in which our power semiconductors are used, but should not be construed to mean that they are necessarily used in the product in the photo.

2026-3 S11.5 FOLS Printed in Japan